BENDER +WIRTH

LED HALTER SERIE 430 + 630

LED HOLDER SERIES 430 + 630

Katalog der Standardhalter für **VS Lighting** COBs

Catalogue of standard holders for **VS Lighting** COBs

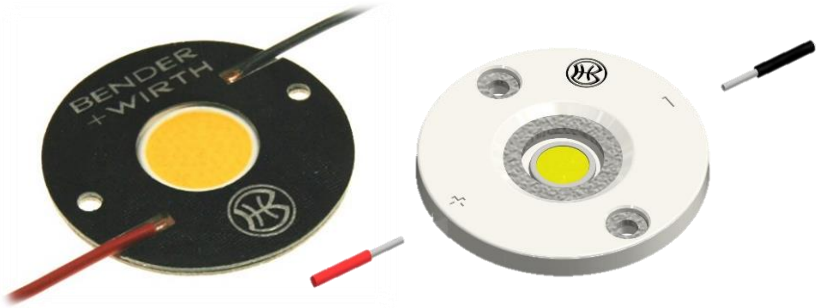

UNSER KONZEPT
FÜR **IHRE**
INDIVIDUELLE
LED MONTAGE

OUR CONCEPT
FOR **YOUR**
INDIVIDUAL
LED MOUNTING

VS LIGHTING SOLUTIONS

INHALTSVERZEICHNIS
CONTENT

BENDER +WIRTH

Hersteller / Supplier	Optik / Optics		Halter Typ / holder type	Seite / Page
COB Halter Hybrid 630 / COB Holder Hybrid 630				
Lowprofile			*6xxz LowProfile*	4
Bayonet50	*Gaggione LLRx7M / Hadar70, Herculux Kirin D50, Ledil 50mm "B"- Optics*		*6xxz Bayonet50*	6
Bayonet50G	*Gaggione LLC66 / LLC79 / Hadar70 / Sirius50 / Ufo*		*6xxz Bayonet50G*	8
Hekla	*Ledil Hekla System*		*6xxz Hekla*	10
Bayonet35	*Herculux Kirin D35, Ledil Amy-B / Yasmeen-B*		*6xxz Bayonet35*	13
3Hook	*Carclo S1, Ledil Angela / Molly / Ronda*		*6xxz 3Hook*	15
Lena	*Ledil Lena*		*6xxz Lena*	17
RJR	*Bartenbach RJR*		*6xxz RJR*	19
Nata	*Nata M30 and M39*		*6xxz Nata M3x*	21
LED Halter 430 / LED Holder 430				
Basishalter / Standard holders			*4xx Typ xx*	23
Almeco	*A1 Fixing System*	*108n/w, DKL97/194, SQ120*	*4xx Typ A1*	24
Bartenbach	*RJR*		*4xx Typ Z1*	27
Carclo	*26,5mm lense*		*4xx Typ C2 / C3*	28
	Newton		*4xx Typ C1*	29
Fraen	*FNL-N1-75*		*4xx Typ F1*	30
Gaggione	*LLR01N*		*4xx Typ G1*	32
	LLR05N		*4xx Typ G2*	33
	LLC 05 / 15 / 25		*4xx Typ K3*	35
	LLC66 / LLC79		*4xx Typ Z1*	36
Jordan	*Serie 75*		*4xx Typ Z1*	38
Khatod	*Cosmo*		*4xx Typ K3 / Z1*	39
	Easy, Easy Assymetric		*4xx Typ Z2 / Z3*	41
	PL 50 SIL		*4xx Typ K2*	44
	SiO 3 / SiO 3 Junior		*4xx Typ K1*	45
	SIR 50		*4xx Typ K3*	46
Ledil	*2x2MX*		*4xx Typ 2x2MX HV*	47
	Clamp System	*Angela, Angelette, Angelina, Molly, Ronda*	*4xx Typ L1 / L2 / L3*	49
	Hekla System	*Barbara-G2, Mirella-G2, Brooke-G2, Carmen, Ronda, Winnie, Zorya*	*4xx Typ L8*	51
	Lena		*4xx Typ L1 / L2 / L3*	53
	PF-System	*Barbara, Mirella*	*4xx Typ L1 / L2*	55
	Saga		*4xx Typ L6*	57
	Stella L1	*Stella A*	*4xx Typ L1*	58
	Stella L4	*Stella HB, HB WWW, Fresnel,RS, G2-VSM*	*4xx Typ L4*	59
	Stella Z1	*Stella T4, VSM, DWC2, G2-T2, G2-T3, G2-T4*	*4xx Typ Z1*	60
	Winnie		*4xx Typ L5*	62
	Zorya		*4xx Typ L7*	63
Ledlink	*CEW / CHQ series*		*4xx Typ LL1*	64
Nata	*M30*		*4xx Typ N1*	65
Mechatronix	*High Bay Cooler*		*4xx Typ M1 / M2*	66
Zhaga	*Book 3*		*4xx Typ Z1*	67

Ist Ihre COB oder die gewünschte Bauform nicht aufgeführt?
Bitte sprechen Sie uns an.
If your COB or requested shape is not listed, please contact us.

Die dargestellten Halter / Reflektor Kombinationen zeigen lediglich die technische Machbarkeit. Technische Daten und Montagehinweise sind in unserem Technical Guide LED Halter Serie 430 und 630 aufgeführt.
Die Kabelaustritte an den Haltern sind abhängig vom verwendeten COB.
Optische Daten und Datenblätter gibt es auf Anfrage nach Verfügbarkeit beim Reflektorhersteller.
The illustrated holder / reflector combinations only show the technical feasibility.
Technical data and mounting instructions are listed in our Technical Guide LED holder series 430 and 630.
The cable exits of the holders are pending on the COB.
Optical data and datasheets are available upon request and availability by the reflector manufacturer.

Die Informationen in diesem Dokument sind ohne Gewähr und können ohne Vorankündigung geändert werden.
The information in this document is provided without liability and subject to change without notice.

COB HALTER HYBRID
COB HOLDER HYBRID

630

BENDER +WIRTH

Gehäusetyp: Housing:	**LowProfile**	**Größe / Size : 44/50 mm** **Höhe / Height : 3,4 mm**
Beispiele für passende Optiken examples of suitable optics	**LEDiL STELLA-T4, -VSM, -DWC2, -G2-T2, -G2-T3, -G2-T4** **KHATOD COSMO 70/90mm**	

633a/47590 (2 : 1) Version 1: 633x, 634x, 637x, 638x, 641x, 652x, 660x

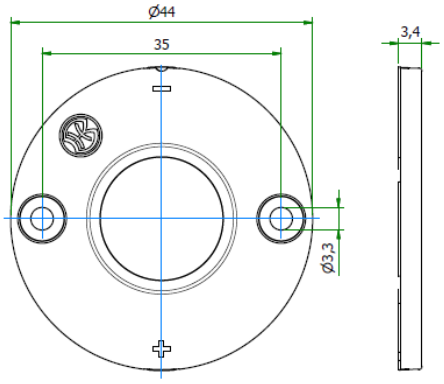

631a/47584 (2 : 1) Version 2: 631x, 632x, 639x, 663x

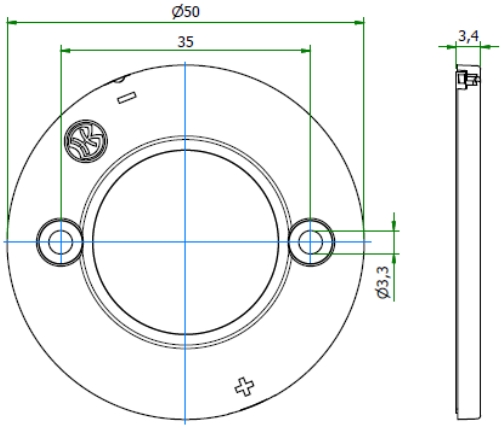

Bemessungsspannung rated voltage	**Standard 250V DC** **optional 450V DC**	**Zulässige COB Abmessungen** Permissible COB dimensions
Bemessungsstrom rated current	**5 A**	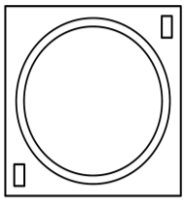 **siehe Einzeldatenblätter im Online Katalog** see data sheets at our web catalogue
Bemessungstemperatur rated operating temperature	**T 120**	
Befestigung fixing	**2 Schrauben M3** 2 screws M3	
max. Drehmonent max. torque	**0,5 Nm**	
Material des Halters material of the holder	**PBT / Mikanit** PBT / Mica	**Zertifikate / certificates**
Kontaktmaterial contactmaterial	**CuSn** CuSn	**Ausweis-Nr.** **File E4729**

Weitere technische Daten und Montagehinweise sind im Technical Guide COB Halterserie 630 enthalten.
Further technical details and mounting instructions are part of the Technical Guide COB holder series 630.

Teilumhüllter Halter für folgende COBs / unenclosed holder for the following COBs:			
Hersteller supplier	**COB Typ** COB Type	**Teile-Nr.** part no.	**Haltervariante** variant of holder
VS Lighting	DMS 102 ***W	**47659**	COB Holder Hybrid 634a LowProfile
VS Lighting	DMS 124 ***W	**47659**	COB Holder Hybrid 634a LowProfile
VS Lighting	DMS 125 / 126 / 128 ***W	**47590**	COB Holder Hybrid 633a LowProfile
VS Lighting	DMS 120 ***W	**47584**	COB Holder Hybrid 631a LowProfile
VS Lighting	DMS 12C / 18B ***W	**47584**	COB Holder Hybrid 631a LowProfile
VS Lighting	DMS 1208J	**47590**	COB Holder Hybrid 633a LowProfile
VS Lighting	DMS 1212J / 1812J	**47584**	COB Holder Hybrid 631a LowProfile
VS Lighting	VCA 042	**47866**	COB Holder Hybrid 634b LowProfile
VS Lighting	VCA2 122 / 123 / 124	**47866**	COB Holder Hybrid 634b LowProfile
VS Lighting	VCA2 126 / 128	**47861**	COB Holder Hybrid 633c LowProfile
VS Lighting	VCA2 1211 / 1213	**47856**	COB Holder Hybrid 631b LowProfile
VS Lighting	WU-M-618 DimToWarm	**47659**	COB Holder Hybrid 634a LowProfile

COB HALTER HYBRID
COB HOLDER HYBRID

630

BENDER +WIRTH

Gehäusetyp: Housing:	**Bayonet50**	**Größe / Size : 50 mm** **Höhe / Height : 4,9 mm**

Beispiele für passende Optiken examples of suitable optics	**LEDiL ANGELA-B, ANGELINA-B, ANGELETTE-B, ZORYA-B, ADELIA-B 50/70/110** **GAGGIONE LLR07M, LLR27M, HADAR70H41*** **HERCULUX KIRIN HOLDER D50**

633a/47420 (2 : 1)

Version 1: 633x, 634x, 637x, 638x, 641x, 652x, 660x

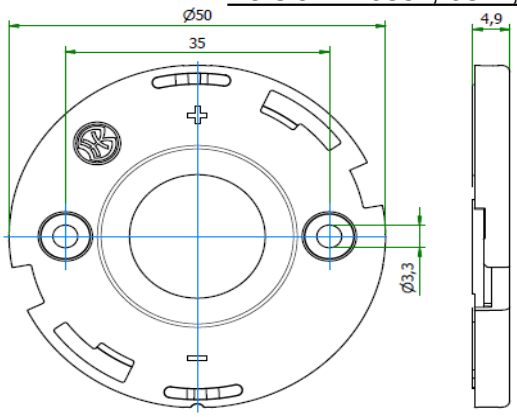

631a/47512 (2 : 1)

Version 2: 631x, 632x, 639x, 663x

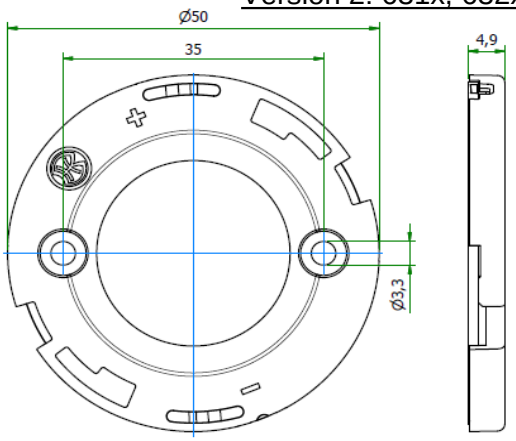

Bemessungsspannung rated voltage	**Standard 250V DC** **optional 450V DC**	
Bemessungsstrom rated current	**5 A**	
Bemessungstemperatur rated operating temperature	**T 120**	
Befestigung fixing	**2 Schrauben M3** 2 screws M3	
max. Drehmonent max. torque	**0,5 Nm**	
Material des Halters material of the holder	**PBT / Mikanit** PBT / Mica	
Kontaktmaterial contactmaterial	**CuSn** CuSn	

Zulässige COB Abmessungen
Permissible COB dimensions

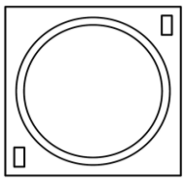

siehe Einzeldatenblätter im Online Katalog

see data sheets at our web catalogue

Zertifikate / certificates

Ausweis-Nr.

File E4729

Weitere technische Daten und Montagehinweise sind im Technical Guide COB Halterserie 630 enthalten.
Further technical details and mounting instructions are part of the Technical Guide COB holder series 630.

Teilumhüllter Halter für folgende COBs / unenclosed holder for the following COBs:				
Hersteller supplier	**COB Typ** COB Type	**Teile-Nr.** part no.	**Haltervariante** variant of holder	
VS Lighting	DMS 102 ***W	**47412**	COB Holder Hybrid 634a	Bayonet50
VS Lighting	DMS 124 ***W	**47412**	COB Holder Hybrid 634a	Bayonet50
VS Lighting	DMS 125 / 126 / 128 ***W	**47420**	COB Holder Hybrid 633a	Bayonet50
VS Lighting	DMS 120 ***W	**47512**	COB Holder Hybrid 631a	Bayonet50
VS Lighting	DMS 12C / 18B ***W	**47512**	COB Holder Hybrid 631a	Bayonet50
VS Lighting	DMS 1208J	**47420**	COB Holder Hybrid 633a	Bayonet50
VS Lighting	DMS 1212J / 1812J	**47512**	COB Holder Hybrid 631a	Bayonet50
VS Lighting	VCA 042	**47413**	COB Holder Hybrid 634b	Bayonet50
VS Lighting	VCA2 122 / 123 / 124	**47413**	COB Holder Hybrid 634b	Bayonet50
VS Lighting	VCA2 126 / 128	**47422**	COB Holder Hybrid 633c	Bayonet50
VS Lighting	VCA2 1211 / 1213	**47528**	COB Holder Hybrid 631b	Bayonet50
VS Lighting	WU-M-618 DimToWarm	**47412**	COB Holder Hybrid 634a	Bayonet50

COB HALTER HYBRID
COB HOLDER HYBRID

630

BENDER +WIRTH

Gehäusetyp: Housing:	**Bayonet50G**	**Größe / Size : 50 mm** **Höhe / Height : 4,5 mm**

Beispiele für passende Optiken examples of suitable optics	**GAGGIONE HADAR70H10* (-ZOOM)** **GAGGIONE LLC66 / LLC79 / SIRIUS50 ZOOM** **GAGGIONE VEGA50 / UFO45 / UFO67**

Version 1: 633x, 634x, 637x, 638x, 641x, 652x, 660x

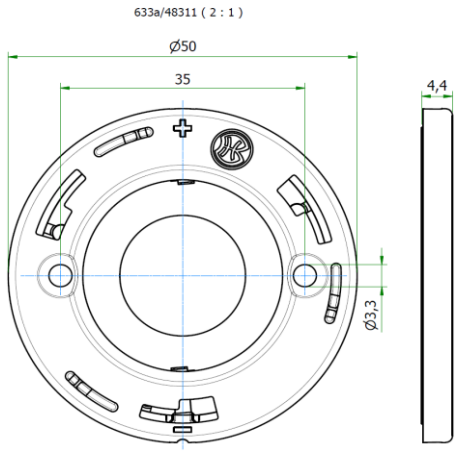

Version 2: 631x, 632x, 639x, 663x

Diese Version ist nicht umgesetzt. Bei Bedarf bitte melden Sie sich bei uns.
This version is not established. Please contact us on request.

Spezielle Schraube mit flachem Kopf erforderlich
Special flat head screw required

e.g. 48279
M3 x 8mm

Bemessungsspannung rated voltage	**Standard 80V DC** **optional 450V DC**
Bemessungsstrom rated current	**5 A**
Bemessungstemperatur rated operating temperature	**T 120**
Befestigung fixing	**2 Schrauben M3** 2 screws M3
max. Drehmonent max. torque	**0,3 Nm**
Material des Halters material of the holder	**PBT / Mikanit** PBT / Mica
Kontaktmaterial contactmaterial	**CuSn** CuSn

Zulässige COB Abmessungen
Permissible COB dimensions

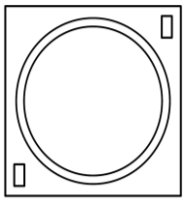

siehe Einzeldatenblätter im Online Katalog

see data sheets at our web catalogue

Zertifikate / certificates

Ausweis-Nr.

File E4729

Weitere technische Daten und Montagehinweise sind im Technical Guide COB Halterserie 630 enthalten.
Further technical details and mounting instructions are part of the Technical Guide COB holder series 630.

Teilumhüllter Halter für folgende COBs / unenclosed holder for the following COBs:			
Hersteller supplier	**COB Typ** COB Type	**Teile-Nr.** part no.	**Haltervariante** variant of holder
VS Lighting	DMS 102 ***W	**48310**	COB Holder Hybrid 634a Bayonet50G
VS Lighting	DMS 124 ***W	**48310**	COB Holder Hybrid 634a Bayonet50G
VS Lighting	DMS 125 / 126 / 128 ***W	**48311**	COB Holder Hybrid 633a Bayonet50G
VS Lighting	DMS 120 ***W	**on request**	Werkzeug fehlt / Tooling required
VS Lighting	DMS 12C / 18B ***W	**on request**	Werkzeug fehlt / Tooling required
VS Lighting	DMS 1208J	**48311**	COB Holder Hybrid 633a Bayonet50G
VS Lighting	DMS 1212J / 1812J	**on request**	Werkzeug fehlt / Tooling required
VS Lighting	VCA 042	**48345**	COB Holder Hybrid 634b Bayonet50G
VS Lighting	VCA2 122 / 123 / 124	**48345**	COB Holder Hybrid 634b Bayonet50G
VS Lighting	VCA2 126 / 128	**48343**	COB Holder Hybrid 633c Bayonet50G
VS Lighting	VCA2 1211 / 1213	**on request**	Werkzeug fehlt / Tooling required
VS Lighting	WU-M-618 DimToWarm	**48310**	COB Holder Hybrid 634a Bayonet50G

COB HALTER HYBRID
COB HOLDER HYBRID

630

BENDER +WIRTH

Gehäusetyp: Housing:	**Hekla**	**Größe / Size : 44/50 mm** **Höhe / Height : 5,5 mm**
Beispiele für passende Optiken examples of suitable optics	**LEDiL BARBARA-G2, MIRELLA-G2, BROOKE-G2, CARMEN 50/70, ZORYA-C** **LEDiL ADELIA-C 50/70/110, ILONA/ILONA ZOOM, RONDA-C, WINNIE-C** **LEDiL AMY/AMY ZOOM (-C) 50/70, YASMEEN/YASMEEN ZOOM (-C) 50/70**	

633a/47495 (2 : 1) Version 1: 633x, 634x, 637x, 638x, 641x, 652x, 660x

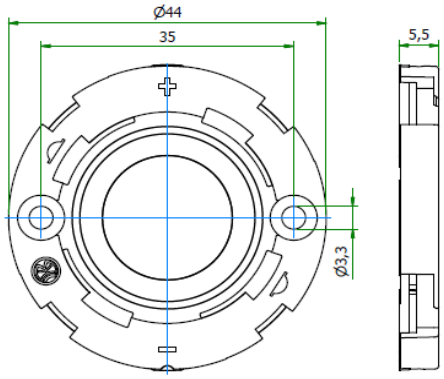

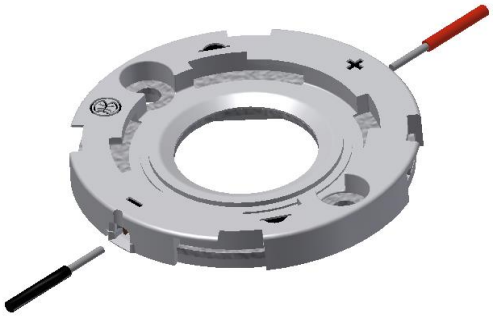

663a/48366 (2 : 1) Version 2: 631x, 632x, 639x, 663x

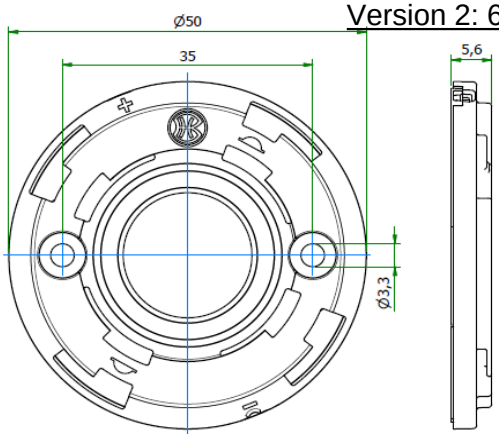

Bemessungsspannung rated voltage	**Standard 250V DC** **optional 450V DC**	**Zulässige COB Abmessungen** Permissible COB dimensions
Bemessungsstrom rated current	**5 A**	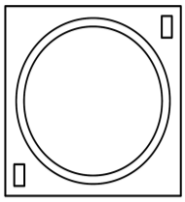 **siehe Einzeldatenblätter im Online Katalog** see data sheets at our web catalogue
Bemessungstemperatur rated operating temperature	**T 120**	
Befestigung fixing	**2 Schrauben M3** 2 screws M3	
max. Drehmonent max. torque	**0,5 Nm**	
Material des Halters material of the holder	**PBT / Mikanit** PBT / Mica	**Zertifikate / certificates**
Kontaktmaterial contactmaterial	**CuSn** CuSn	**Ausweis-Nr.** **File E4729**

Weitere technische Daten und Montagehinweise sind im Technical Guide COB Halterserie 630 enthalten.
Further technical details and mounting instructions are part of the Technical Guide COB holder series 630.

COB HALTER HYBRID
COB HOLDER HYBRID

630

BENDER +WIRTH

Teilumhüllter Halter für folgende COBs / unenclosed holder for the following COBs:			
Hersteller supplier	**COB Typ** COB Type	**Teile-Nr.** part no.	**Haltervariante** variant of holder
VS Lighting	DMS 102 ***W	**47505**	COB Holder Hybrid 634a Hekla
VS Lighting	DMS 124 ***W	**47505**	COB Holder Hybrid 634a Hekla
VS Lighting	DMS 125 / 126 / 128 ***W	**47495**	COB Holder Hybrid 633a Hekla
VS Lighting	DMS 120 ***W	**48219**	COB Holder Hybrid 631a Hekla XL
VS Lighting	DMS 12C / 18B ***W	**48219**	COB Holder Hybrid 631a Hekla XL
VS Lighting	DMS 1208J	**47495**	COB Holder Hybrid 633a Hekla
VS Lighting	DMS 1212J / 1812J	**48219**	COB Holder Hybrid 631a Hekla XL
VS Lighting	VCA 042	**47864**	COB Holder Hybrid 634b Hekla
VS Lighting	VCA2 122 / 123 / 124	**47864**	COB Holder Hybrid 634b Hekla
VS Lighting	VCA2 126 / 128	**47560**	COB Holder Hybrid 633c Hekla
VS Lighting	VCA2 1211 / 1213	**48220**	COB Holder Hybrid 631b Hekla XL
VS Lighting	WU-M-618 DimToWarm	**47505**	COB Holder Hybrid 634a Hekla

Gehäusetyp: Housing:	Hekla	Größe / Size : 44/50 mm Höhe / Height : 5,5 mm
Beispiele für passende Optiken examples of suitable optics	LEDiL BARBARA-G2, MIRELLA-G2, BROOKE-G2, CARMEN 50/70, ZORYA-C LEDiL ADELIA-C 50/70/110, ILONA/ILONA ZOOM, RONDA-C, WINNIE-C LEDiL AMY/AMY ZOOM (-C) 50/70, YASMEEN/YASMEEN ZOOM (-C) 50/70	

Ø 70 mm
BARBARA-G2

Ø 70 mm

Ø 70 mm

Ø 110 mm

Ø 45 mm
BROOKE-G2

Ø 50 mm
MIRELLA-G2

Ø 50 mm
ADELY

Ø 50 mm

Ø 75 mm
ADELIA

Ø 55 mm
incl. ZORYA-ADAPTER-HEKLA
ZORYA

Ø 50 mm

Ø 70 mm
(incl. CARMEN-HLD-C)
CARMEN

RONDA
incl. RONDA-HLD-C

Ø54 mm

WINNIE
incl. WINNIE-HLD-C

Ø 50 mm

AMY &
AMY-ZOOM
incl. AMY-HLD-C

Ø 110 mm

Ø 70 mm

Ø 50 mm

YASMEEN &
YASMEEN-ZOOM
incl. YASMEEN-HLD-C

Ø 70 mm

Ø 50 mm

ILONA &
ILONA-ZOOM

Ø 50 mm

COB HALTER HYBRID
COB HOLDER HYBRID

630

BENDER +WIRTH

Gehäusetyp: Housing:	**Bayonet35**	**Größe / Size : 32mm** **Höhe / Height : 5,3 / 3,6 mm**
Beispiele für passende Optiken examples of suitable optics	**LEDiL AMY/ AMY ZOOM (-B), YASMEEN / YASMEEN ZOOM (-B)** **GAGGIONE HADAR70H40* (-ZOOM)** **HERCULUX KIRIN HOLDER D35**	

Version 1 Bayonet35/20 : 634x, 652x, 660x, 667x

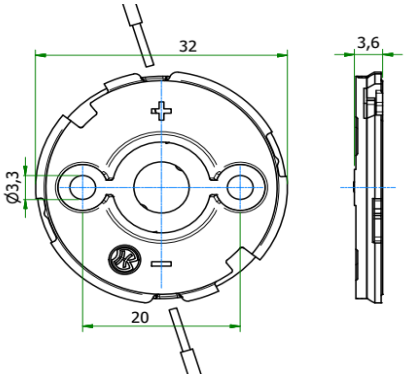

Spezielle Schraube mit flachem Kopf erforderlich
Special flat head screw required

e.g. 48279
M3 x 8mm

Bemessungsspannung rated voltage	**Standard 250V DC** **optional 450V DC**
Bemessungsstrom rated current	**5 A**
Bemessungstemperatur rated operating temperature	**T 120**
Befestigung fixing	**2 Schrauben M3** 2 screws M3
max. Drehmonent max. torque	**0,3 Nm**
Material des Halters material of the holder	**PBT / Mikanit** PBT / Mica
Kontaktmaterial contactmaterial	**CuSn** CuSn

Zulässige COB Abmessungen
Permissible COB dimensions

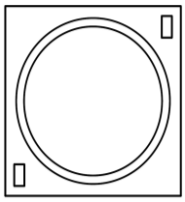

siehe Einzeldatenblätter im Online Katalog

see data sheets at our web catalogue

Zertifikate / certificates

Ausweis-Nr.

File E4729

Weitere technische Daten und Montagehinweise sind im Technical Guide COB Halterserie 630 enthalten.
Further technical details and mounting instructions are part of the Technical Guide COB holder series 630.

Teilumhüllter Halter für folgende COBs / unenclosed holder for the following COBs:				
Hersteller supplier	**COB Typ** COB Type	**Teile-Nr.** part no.	**Haltervariante** variant of holder	
VS Lighting	DMS 102 ***W	**49039**	COB Holder Hybrid 634a	Bayonet35/20
VS Lighting	DMS 124 ***W	**49039**	COB Holder Hybrid 634a	Bayonet35/20
VS Lighting	VCA 042	**49047**	COB Holder Hybrid 634b	Bayonet35/20
VS Lighting	VCA2 122 / 123 / 124	**49047**	COB Holder Hybrid 634b	Bayonet35/20
VS Lighting	WU-M-618 DimToWarm	**49039**	COB Holder Hybrid 634a	Bayonet35/20

COB HALTER HYBRID
COB HOLDER HYBRID

630

BENDER +WIRTH

Gehäusetyp: Housing:	**3Hook**	**Größe / Size : 50 mm** **Höhe / Height : 5,9 mm**
Beispiele für passende Optiken examples of suitable optics	**LEDiL ANGELA, ANGELINA, ANGELETTE** **LEDiL MOLLY, RONDA (HOLDER A)** **CARCLO S1**	

Version 1: 633x, 634x, 637x, 638x, 641x, 652x, 660x

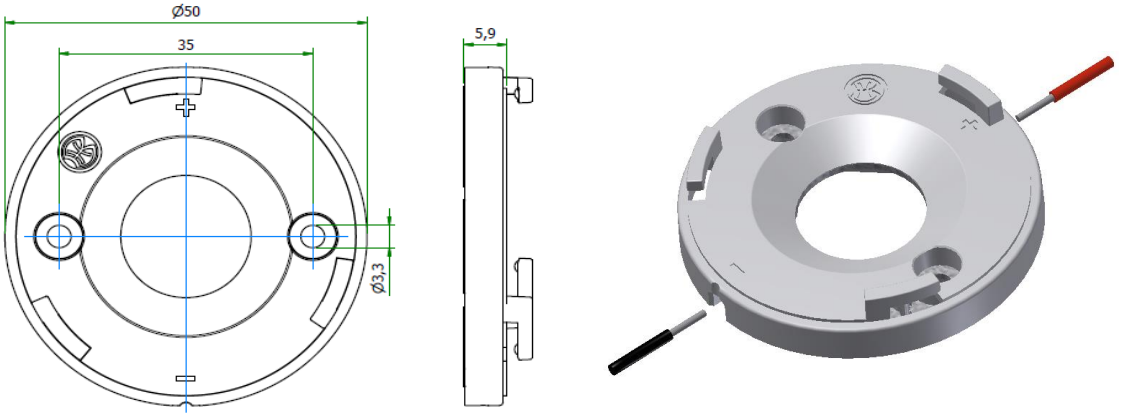

Version 2: 631x, 632x, 639x, 663x

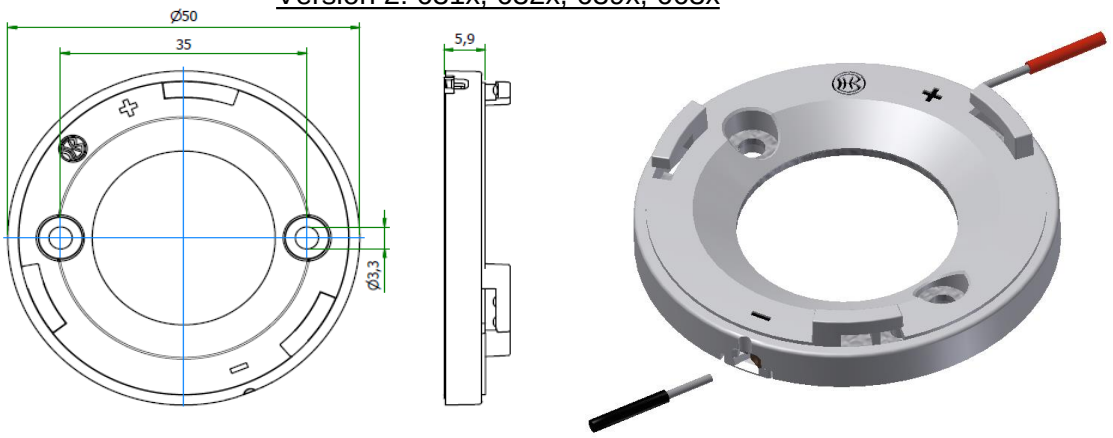

Bemessungsspannung rated voltage	**Standard 250V DC** **optional 450V DC**
Bemessungsstrom rated current	**5 A**
Bemessungstemperatur rated operating temperature	**T 120**
Befestigung fixing	**2 Schrauben M3** 2 screws M3
max. Drehmonent max. torque	**0,5 Nm**
Material des Halters material of the holder	**PBT / Mikanit** PBT / Mica
Kontaktmaterial contactmaterial	**CuSn** CuSn

Zulässige COB Abmessungen
Permissible COB dimensions

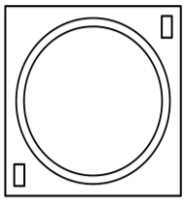

siehe Einzeldatenblätter im Online Katalog

see data sheets at our web catalogue

Zertifikate / certificates

Ausweis-Nr.

File E4729

Weitere technische Daten und Montagehinweise sind im Technical Guide COB Halterserie 630 enthalten.
Further technical details and mounting instructions are part of the Technical Guide COB holder series 630.

Teilumhüllter Halter für folgende COBs / unenclosed holder for the following COBs:			
Hersteller supplier	**COB Typ** COB Type	**Teile-Nr.** part no.	**Haltervariante** variant of holder
VS Lighting	DMS 102 ***W	**47441**	COB Holder Hybrid 634a 3Hook
VS Lighting	DMS 124 ***W	**47441**	COB Holder Hybrid 634a 3Hook
VS Lighting	DMS 125 / 126 / 128 ***W	**47562**	COB Holder Hybrid 633a 3Hook
VS Lighting	DMS 120 ***W	**47582**	COB Holder Hybrid 631a 3Hook
VS Lighting	DMS 12C / 18B ***W	**47582**	COB Holder Hybrid 631a 3Hook
VS Lighting	DMS 1208J	**47562**	COB Holder Hybrid 633a 3Hook
VS Lighting	DMS 1212J / 1812J	**47582**	COB Holder Hybrid 631a 3Hook
VS Lighting	VCA 042	**47863**	COB Holder Hybrid 634b 3Hook
VS Lighting	VCA2 122 / 123 / 124	**47863**	COB Holder Hybrid 634b 3Hook
VS Lighting	VCA2 126 / 128	**47564**	COB Holder Hybrid 633c 3Hook
VS Lighting	VCA2 1211 / 1213	**47583**	COB Holder Hybrid 631b 3Hook
VS Lighting	WU-M-618 DimToWarm	**47441**	COB Holder Hybrid 634a 3Hook

COB HALTER HYBRID
COB HOLDER HYBRID

630

BENDER +WIRTH

Gehäusetyp: Housing:	**Lena**	**Größe / Size : 50 mm** **Höhe / Height : 7,7 mm**
Beispiele für passende Optiken examples of suitable optics	**LEDiL LENA, LENINA**	

Version 1: 633x, 634x, 637x, 638x, 641x, 652x, 660x

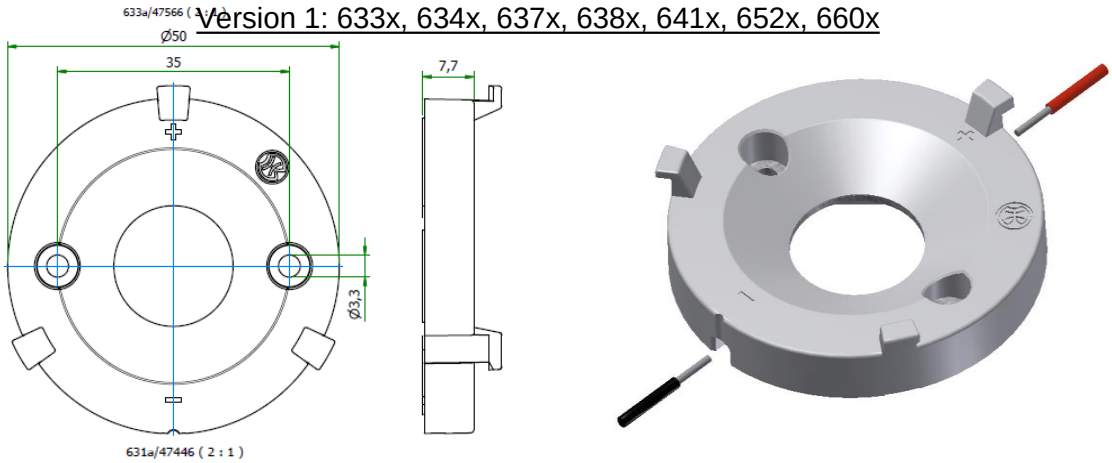

Version 2: 631x, 632x, 639x, 663x

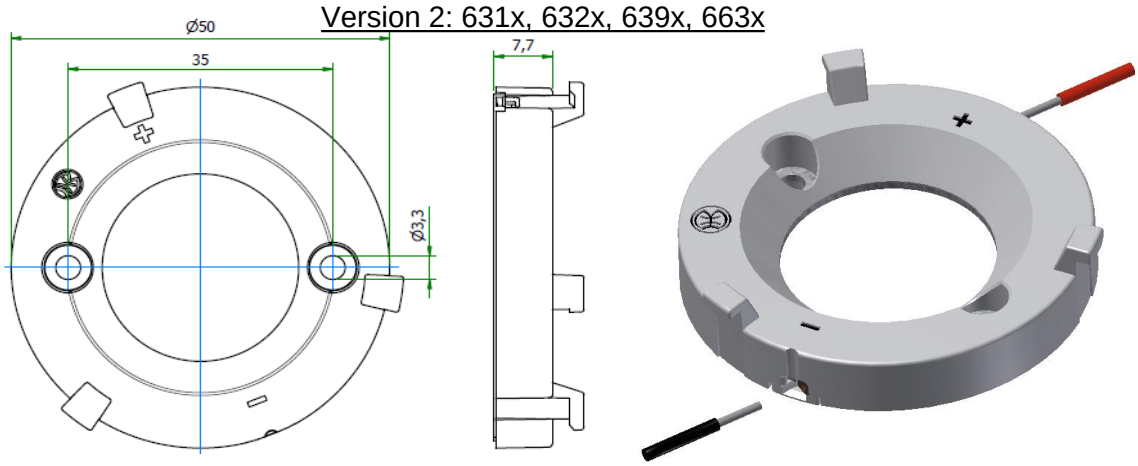

Bemessungsspannung rated voltage	**Standard 250V DC** **optional 450V DC**	**Zulässige COB Abmessungen** Permissible COB dimensions
Bemessungsstrom rated current	**5 A**	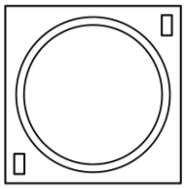 **siehe Einzeldatenblätter im Online Katalog** see data sheets at our web catalogue
Bemessungstemperatur rated operating temperature	**T 120**	
Befestigung fixing	**2 Schrauben M3** 2 screws M3	
max. Drehmonent max. torque	**0,5 Nm**	
Material des Halters material of the holder	**PBT / Mikanit** PBT / Mica	**Zertifikate / certificates**
Kontaktmaterial contactmaterial	**CuSn** CuSn	**Ausweis-Nr.** **File E4729**

Weitere technische Daten und Montagehinweise sind im Technical Guide COB Halterserie 630 enthalten.
Further technical details and mounting instructions are part of the Technical Guide COB holder series 630.

Teilumhüllter Halter für folgende COBs / unenclosed holder for the following COBs:			
Hersteller supplier	**COB Typ** COB Type	**Teile-Nr.** part no.	**Haltervariante** variant of holder
VS Lighting	DMS 102 ***W	**47444**	COB Holder Hybrid 634a Lena
VS Lighting	DMS 124 ***W	**47444**	COB Holder Hybrid 634a Lena
VS Lighting	DMS 125 / 126 / 128 ***W	**47566**	COB Holder Hybrid 633a Lena
VS Lighting	DMS 120 ***W	**47446**	COB Holder Hybrid 631a Lena
VS Lighting	DMS 12C / 18B ***W	**47446**	COB Holder Hybrid 631a Lena
VS Lighting	DMS 1208J	**47566**	COB Holder Hybrid 633a Lena
VS Lighting	DMS 1212J / 1812J	**47446**	COB Holder Hybrid 631a Lena
VS Lighting	VCA 042	**47865**	COB Holder Hybrid 634b Lena
VS Lighting	VCA2 122 / 123 / 124	**47865**	COB Holder Hybrid 634b Lena
VS Lighting	VCA2 126 / 128	**47576**	COB Holder Hybrid 633c Lena
VS Lighting	VCA2 1211 / 1213	**47855**	COB Holder Hybrid 631b Lena
VS Lighting	WU-M-618 DimToWarm	**47444**	COB Holder Hybrid 634a Lena

COB HALTER HYBRID
COB HOLDER HYBRID

630

BENDER +WIRTH

Gehäusetyp: Housing:	**RJR**	**Größe / Size : 61,5 mm** **Höhe / Height : 6,5 mm**
Beispiele für passende Optiken examples of suitable optics	**BARTENBACH RJR OPTIC**	

Version 1: 633x, 634x, 637x, 638x, 641x, 652x, 660x

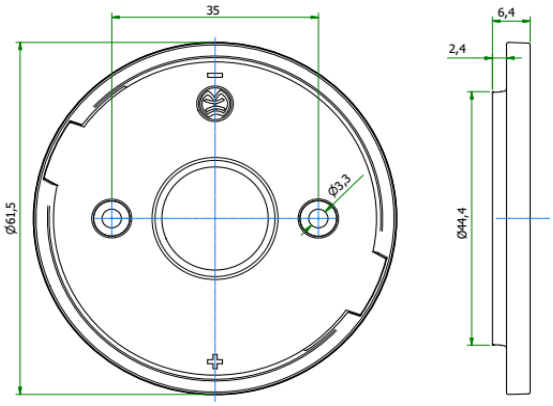

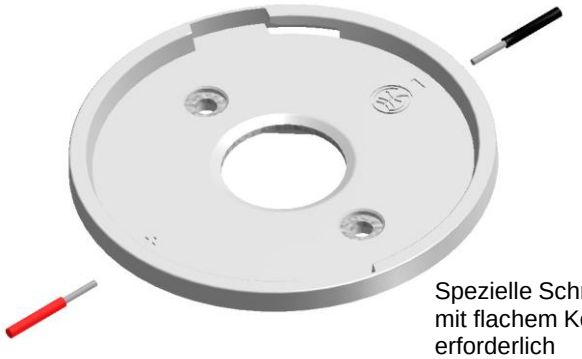

Spezielle Schraube mit flachem Kopf erforderlich
Special flat head screw required

e.g. 48279
M3 x 8mm

Version 2: 631x, 632x, 639x, 663x

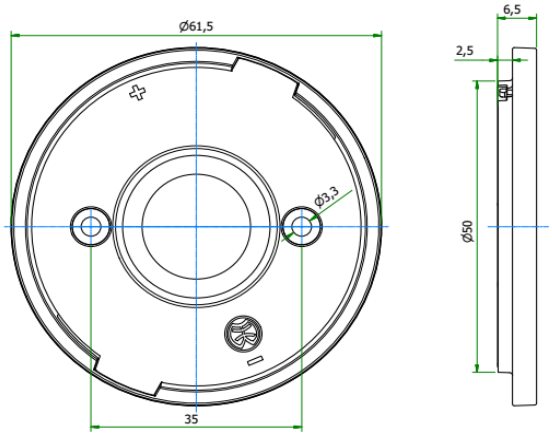

Bemessungsspannung rated voltage	**Standard 250V DC** **optional 450V DC**	**Zulässige COB Abmessungen** Permissible COB dimensions
Bemessungsstrom rated current	**5 A**	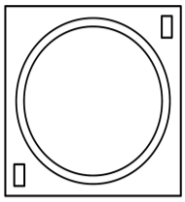 **siehe Einzeldatenblätter im Online Katalog** see data sheets at our web catalogue
Bemessungstemperatur rated operating temperature	**T 120**	
Befestigung fixing	**2 Schrauben M3** 2 screws M3	
max. Drehmonent max. torque	**0,5 Nm**	
Material des Halters material of the holder	**PBT / Mikanit** PBT / Mica	**Zertifikate / certificates**
Kontaktmaterial contactmaterial	**CuSn** CuSn	**Ausweis-Nr. 40050075** **File E472943**

Weitere technische Daten und Montagehinweise sind im Technical Guide COB Halterserie 630 enthalten.
Further technical details and mounting instructions are part of the Technical Guide COB holder series 630.

COB HALTER HYBRID
COB HOLDER HYBRID

630

BENDER +WIRTH

Teilumhüllter Halter für folgende COBs / unenclosed holder for the following COBs:			
Hersteller supplier	**COB Typ** COB Type	**Teile-Nr.** part no.	**Haltervariante** variant of holder
VS Lighting	DMS 125 / 126 / 128 ***W	**48803**	COB Holder Hybrid 633a RJR
VS Lighting	DMS 120 ***W	**on request**	Werkzeug fehlt / Tooling required
VS Lighting	DMS 1208J	**48803**	COB Holder Hybrid 633a RJR
VS Lighting	VCA2 126 / 128	**48815**	COB Holder Hybrid 633c RJR
Ist Ihre COB nicht aufgeführt? Bitte sprechen Sie uns an. If your COB is not listed, please contact us.			

COB HALTER HYBRID
COB HOLDER HYBRID

630

BENDER +WIRTH

Gehäusetyp: Housing:	**NATA**	**Größe /** Size : **44/50 mm** **Höhe /** Height : **5,8 mm**
Beispiele für passende Optiken examples of suitable optics	**NATA M30 e.g. 1687M,1709M,1-0788M etc.** **NATA M39 e.g. 2-1672M, 2-1674M, 2-2010M etc**	

Version 1 M30 : 633x, 634x, 637x, 638x, 641x, 652x, 660x

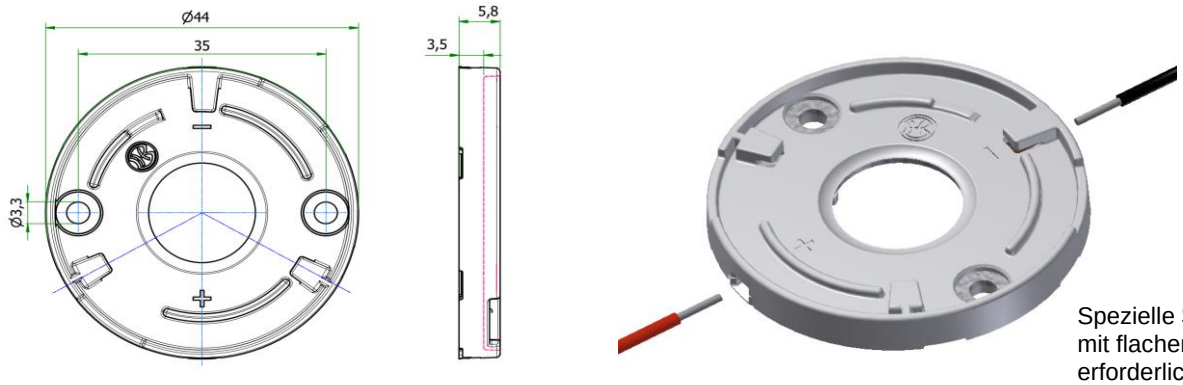

Spezielle Schraube mit flachem Kopf erforderlich
Special flat head screw required

e.g. 48279
M3 x 8mm

Version 2 M39 : 631x, 632x, 639x, 663x

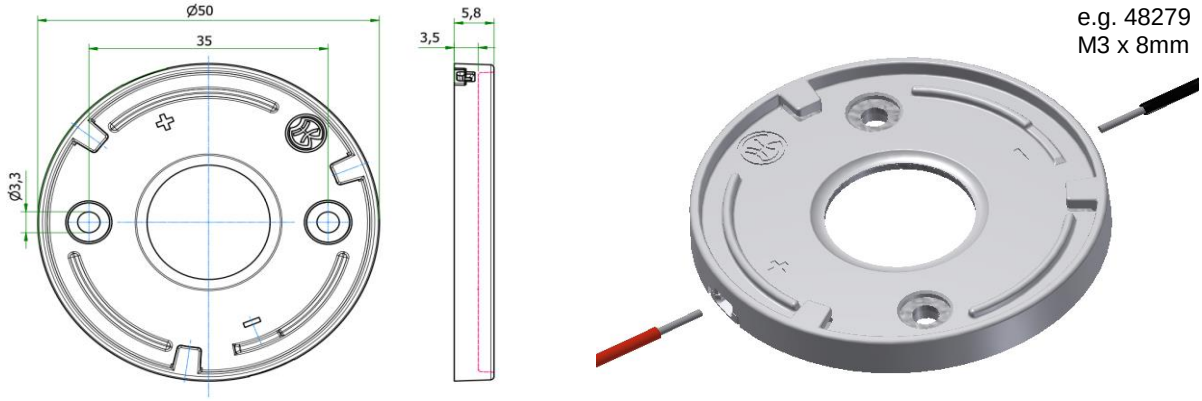

Bemessungsspannung rated voltage	**Standard 250V DC** **optional 450V DC**
Bemessungsstrom rated current	**5 A**
Bemessungstemperatur rated operating temperature	**T 120**
Befestigung fixing	**2 Schrauben M3** 2 screws M3
max. Drehmonent max. torque	**0,5 Nm**
Material des Halters material of the holder	**PBT / Mikanit** PBT / Mica
Kontaktmaterial contactmaterial	**CuSn** CuSn

Zulässige COB Abmessungen
Permissible COB dimensions

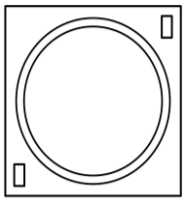

siehe Einzeldatenblätter im Online Katalog

see data sheets at our web catalogue

Zertifikate / certificates

Ausweis-Nr. 40050075

File E472943

Weitere technische Daten und Montagehinweise sind im Technical Guide COB Halterserie 630 enthalten.
Further technical details and mounting instructions are part of the Technical Guide COB holder series 630.

COB HALTER HYBRID
COB HOLDER HYBRID

630

BENDER +WIRTH

Teilumhüllter Halter für folgende COBs / unenclosed holder for the following COBs:				
Hersteller supplier	**COB Typ** COB Type	**Teile-Nr.** part no.	**Haltervariante** variant of holder	
VS Lighting	DMS 124 ***W	**48924**	COB Holder Hybrid 634a	Nata M30
VS Lighting	DMS 125 / 126 / 128 ***W	**48923**	COB Holder Hybrid 633a	Nata M30
VS Lighting	DMS 1208J	**48923**	COB Holder Hybrid 633a	Nata M30
VS Lighting	VCA2 122 / 123 / 124	**on request**	COB Holder Hybrid 634b	Nata M30
VS Lighting	VCA2 126 / 128	**on request**	COB Holder Hybrid 633c	Nata M30
VS Lighting	WU-M-618 DimToWarm	**48924**	COB Holder Hybrid 634a	Nata M30
Ist Ihre COB nicht aufgeführt? Bitte sprechen Sie uns an. If your COB is not listed, please contact us.				

Basishalter für Anwendungen, in denen keine besondere Anbindung zur Optik erforderlich ist.
Basic holders for applications without specific connection requirements to the optical system

Weitere Details unter More details at	www.bender-wirth.de	**Zertifikate /** certificates
LED Halter B+W LED Holder B+W	4xx / Typ xx	**Ausweis-Nr.** **40041342** **File** **E472943**

4xx / Typ xx

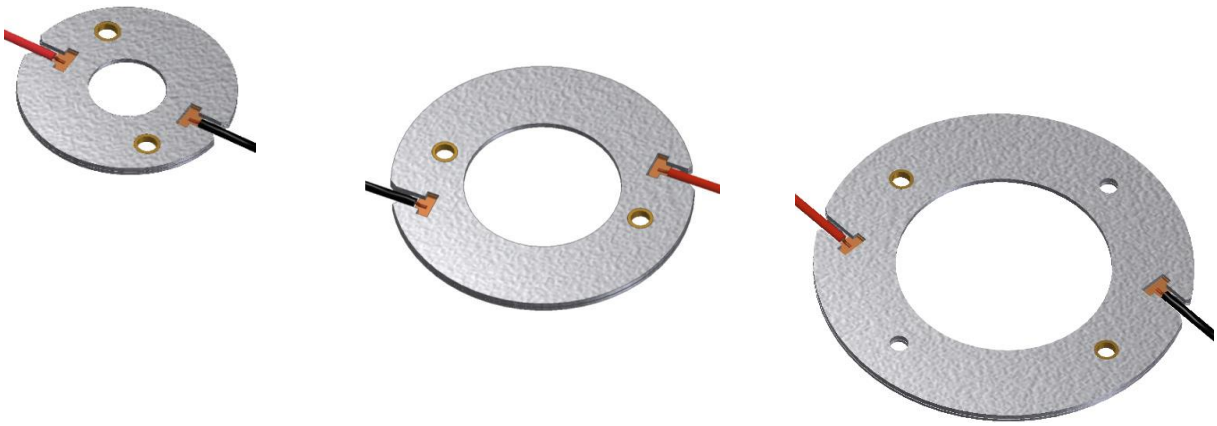

Mögliche Halter / COB Kombinationen / Holder / COB combinations

COB Hersteller COB Supplier	COB Typ COB Type	Halter Holder	Abmessungen Dimensions
VS Lighting	DMS 102 ***W	434 Typ 2	Ø 35 / 25
VS Lighting	DMS 124 ***W	434 Typ 2	Ø 35 / 25
VS Lighting	DMS 125 / 126 / 128 ***W	433 Typ 2	Ø 40 / 30
VS Lighting	DMS 120 ***W	431 Typ 2	Ø 50 / 35
VS Lighting	DMS 12C / 18B ***W	431 Typ 2	Ø 50 / 35
VS Lighting	DMS 1208J	433 Typ 2	Ø 40 / 30
VS Lighting	DMS 1212J / 1812J	431 Typ 2	Ø 50 / 35
VS Lighting	VCA 042	486 Typ Z4	Ø 35 / 25
VS Lighting	VCA2 122 / 123 / 124	486 Typ Z4	Ø 35 / 25
VS Lighting	VCA2 126 / 128	477 Typ 2	Ø 40 / 30
VS Lighting	VCA2 1211 / 1213	471 Typ 2	Ø 50 / 35
VS Lighting	TW 1914 Tunable	493 Typ L8	Ø 44 / 35
VS Lighting	TW 2820 Tunable	494 Typ Z1	Ø 49 / 35
VS Lighting	WU-M-618 DimToWarm	434 Typ 2	Ø 35 / 25

ALMECO GROUP

reflect+A team

108n / 108w

Almeco Reflektor Almeco reflector	**108n**: 9568-01-xx-xx beam: <25° **108w**: 9567-01-xx-xx beam: >40°
Hersteller Webseite Manufacturer website	www.almecogroup.com
LED Halter B+W LED Holder B+W	4xx / Typ A1

4xx Typ A1

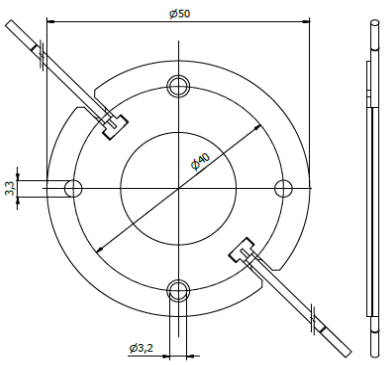

Reflector 108n

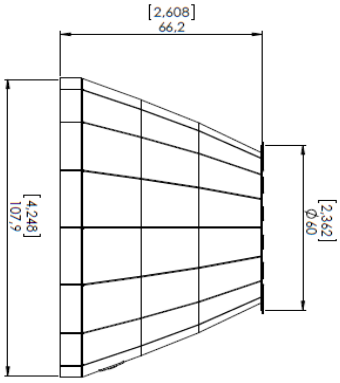

Reflector 108w

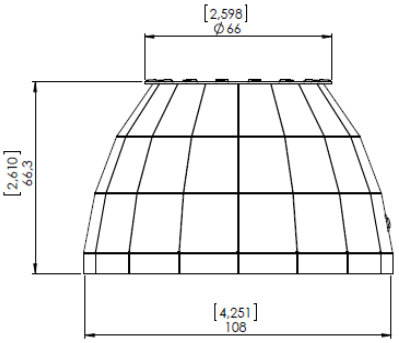

Mögliche Halter / COB Kombinationen / Holder / COB combinations Almeco 108n / 108w

COB Hersteller COB Supplier	COB Typ COB Type	Halter Holder	Reflektor Reflector
VS Lighting	DMS 102 ***W	434 Typ A1	see part numbers above
VS Lighting	DMS 124 ***W	434 Typ A1	see part numbers above
VS Lighting	DMS 125 / 126 / 128 ***W	433 Typ A1	see part numbers above
VS Lighting	DMS 120 ***W	431 Typ A1	see part numbers above
VS Lighting	DMS 12C / 18B ***W	431 Typ A1	see part numbers above
VS Lighting	DMS 1208J	433 Typ A1	see part numbers above
VS Lighting	DMS 1212J / 1812J	431 Typ A1	see part numbers above
VS Lighting	VCA2 122 / 123 / 124	486 Typ A1	see part numbers above
VS Lighting	VCA2 126 / 128	477 Typ A1	see part numbers above
VS Lighting	VCA2 1211 / 1213	471 Typ A1	see part numbers above
VS Lighting	TW 1914 Tunable	493 Typ A1	see part numbers above
VS Lighting	TW 2820 Tunable	494 Typ A1	see part numbers above
VS Lighting	WU-M-618 DimToWarm	434 Typ A1	see part numbers above

ALMECO GROUP

reflect+A team

DKL 97

Almeco Reflektor Almeco reflector	9566-01-xx-xx *beam: batwing*
Hersteller Webseite Manufacturer website	www.almecogroup.com
LED Halter B+W LED Holder B+W	4xx / Typ A1

4xx Typ A1

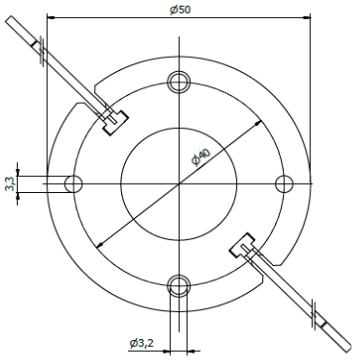

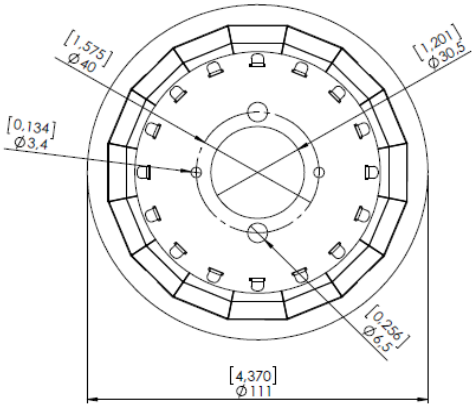

Reflector DKL97

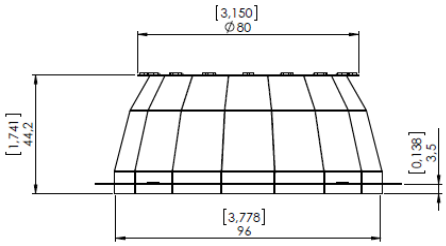

Mögliche Halter / COB Kombinationen / Holder / COB combinations **Almeco DKL 97**

COB Hersteller COB Supplier	COB Typ COB Type	Halter Holder	Reflektor Reflector
VS Lighting	DMS 102 ***W	434 Typ A1	see part numbers above
VS Lighting	DMS 124 ***W	434 Typ A1	see part numbers above
VS Lighting	DMS 125 / 126 / 128 ***W	433 Typ A1	see part numbers above
VS Lighting	DMS 120 ***W	431 Typ A1	see part numbers above
VS Lighting	DMS 12C / 18B ***W	431 Typ A1	see part numbers above
VS Lighting	DMS 1208J	433 Typ A1	see part numbers above
VS Lighting	DMS 1212J / 1812J	431 Typ A1	see part numbers above
VS Lighting	VCA2 122 / 123 / 124	486 Typ A1	see part numbers above
VS Lighting	VCA2 126 / 128	477 Typ A1	see part numbers above
VS Lighting	VCA2 1211 / 1213	471 Typ A1	see part numbers above
VS Lighting	TW 1914 Tunable	493 Typ A1	see part numbers above
VS Lighting	TW 2820 Tunable	494 Typ A1	see part numbers above
VS Lighting	WU-M-618 DimToWarm	434 Typ A1	see part numbers above

ALMECO GROUP

reflect+A team

DKL194/SQ120

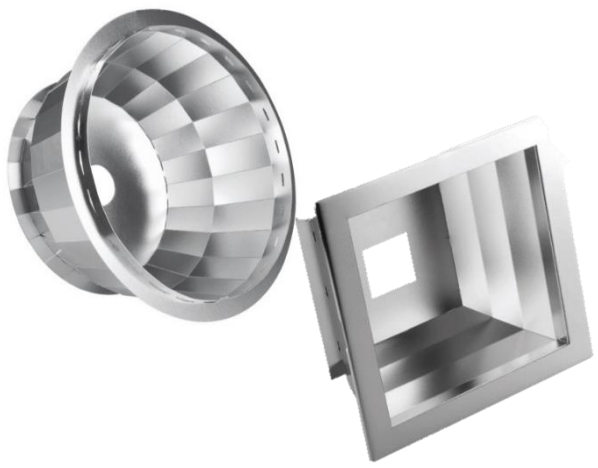

Almeco Reflektor Almeco reflector	**DKL194**: 9565-01-xx-xx beam: batwing **DKL SQ120**: 9569-01-xx-xx beam: batwing
Hersteller Webseite Manufacturer website	www.almecogroup.com
LED Halter B+W LED Holder B+W	4xx / Typ A1

4xx Typ A1

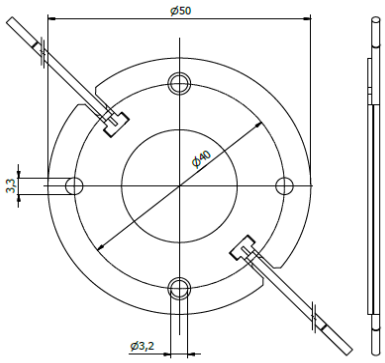

Reflector DKL 194

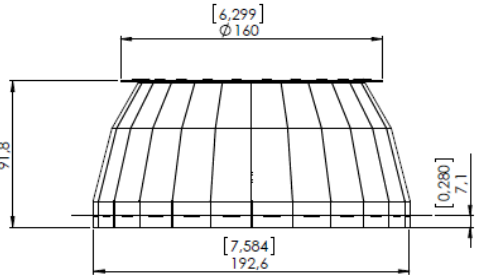

Reflector DKL SQ120

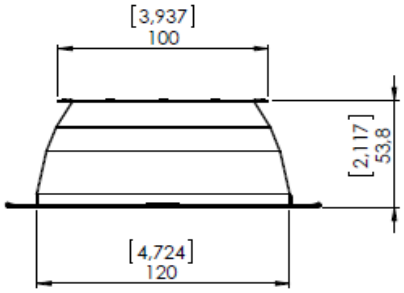

Mögliche Halter / COB Kombinationen / Holder / COB combinations **Almeco DKL 194/SQ120**

COB Hersteller COB Supplier	COB Typ COB Type	Halter Holder	Reflektor Reflector
VS Lighting	DMS 120 ***W	431 Typ A1	see part numbers above
VS Lighting	DMS 12C / 18B ***W	431 Typ A1	see part numbers above
VS Lighting	DMS 1208J	433 Typ A1	see part numbers above
VS Lighting	DMS 1212J / 1812J	431 Typ A1	see part numbers above
VS Lighting	VCA2 1211 / 1213	471 Typ A1	see part numbers above
VS Lighting	TW 2820 Tunable	494 Typ A1	see part numbers above

Bartenbach
THE LIGHTING INNOVATORS

RJR

Bartenbach Reflektor
Bartenbach reflector

RJR Reflektor Serie

Hersteller Webseite
Manufacturer website

www.bartenbach.com

LED Halter B+W
LED Holder B+W

4xx / Typ Z1

4xx Typ Z1

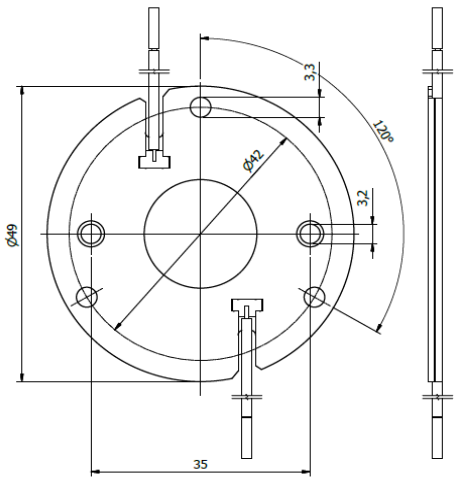

Adapter CJR-6262-0000-00

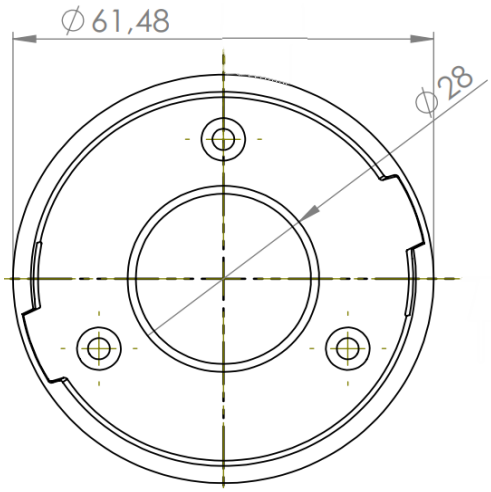

Mögliche Halter / COB Kombinationen / Holder / COB combinations Bartenbach RJR

COB Hersteller COB Supplier	COB Typ COB Type	Halter Holder	Linse / Halter Lense / Holder
VS Lighting	DMS 125 / 126 / 128 ***W	433 Typ Z1	Adapter CJR-6262-0000-00
VS Lighting	DMS 1208J	433 Typ Z1	Adapter CJR-6262-0000-00
VS Lighting	VCA2 126 / 128	477 Typ Z1	Adapter CJR-6262-0000-00
VS Lighting	TW 1914 Tunable	493 Typ Z1	Adapter CJR-6262-0000-00

carclo Optics

26,5mm Family

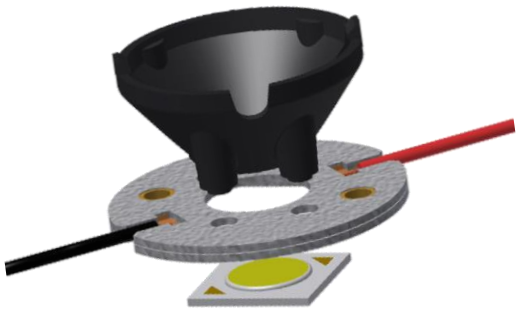

Carclo Linsenhalter Carclo lense holder	10460 white 10490 black 12040 clear
Hersteller Webseite Manufacturer website	www.carclo-optics.com
LED Halter B+W LED Holder B+W	4xx / Typ C2 4xx / Typ C3

4xx Typ C2

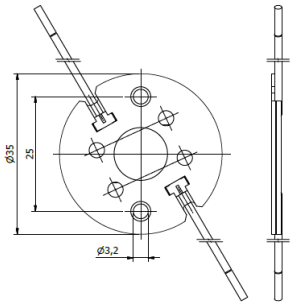

4xx Typ C3

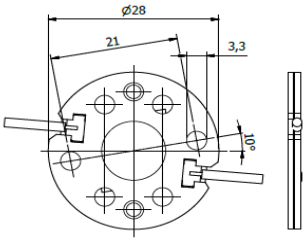

10460 white

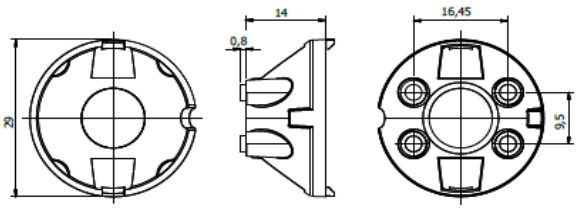

Mögliche Halter / COB Kombinationen / Holder / COB combinations **Carclo 26,5 mm**

COB Hersteller COB Supplier	COB Typ COB Type	Halter Holder	Adapter Base part
VS Lighting	**DMS 102 ***W**	**434 Typ C2**	**10460 (white)**
VS Lighting	**VCA 042**	**486 Typ C2**	**10460 (white)**

carclo Optics

Newton

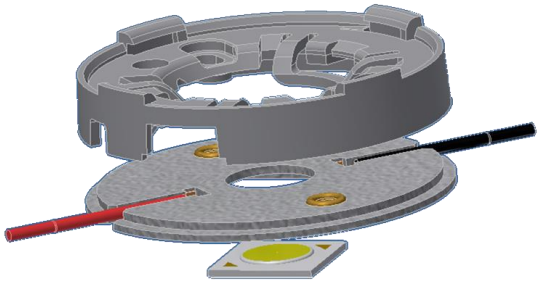

Carclo Adapter
Carclo adaptor
12796

Hersteller Webseite
Manufacturer website
www.carclo-optics.com

LED Halter B+W
LED Holder B+W
4xx / Typ C1

4xx Typ C1

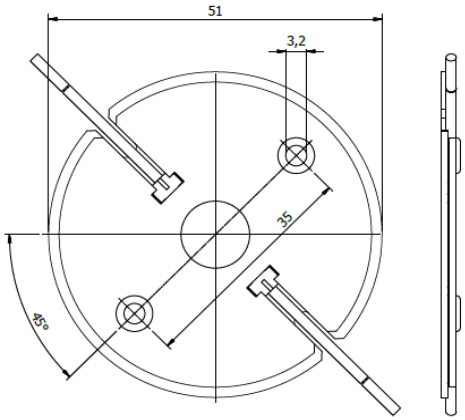

12796

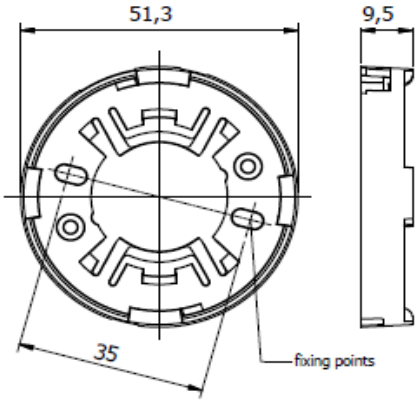

Mögliche Halter / COB Kombinationen / Holder / COB combinations **Carclo Newton**

COB Hersteller COB Supplier	COB Typ COB Type	Halter Holder	Adapter Base part
VS Lighting	DMS 102 ***W	434 Typ C1	12796
VS Lighting	DMS 124 ***W	434 Typ C1	12796
VS Lighting	DMS 125 / 126 / 128 ***W	433 Typ C1	12796
VS Lighting	DMS 1208J	433 Typ C1	12796
VS Lighting	VCA 042	486 Typ C1	12796
VS Lighting	VCA2 122 / 123 / 124	486 Typ C1	12796
VS Lighting	VCA2 126 / 128	477 Typ C1	12796
VS Lighting	TW 1914 Tunable	493 Typ C1	12796
VS Lighting	WU-M-618 DimToWarm	434 Typ C1	12796

FRAEN MAXIMIZING LIGHT

FNL-N1-75

Fraen Linse Fraen lense	FNL-N1-75-HB
Fraen Adapter Fraen base part	FTS-FNL 7551 B
Hersteller Webseite Manufacturer website	www.fraen.com/optics
LED Halter B+W LED Holder B+W	4xx / Typ F1

4xx Typ F1

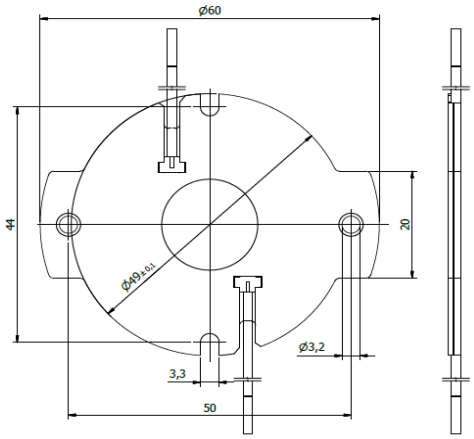

FTS-FNL 7551 B

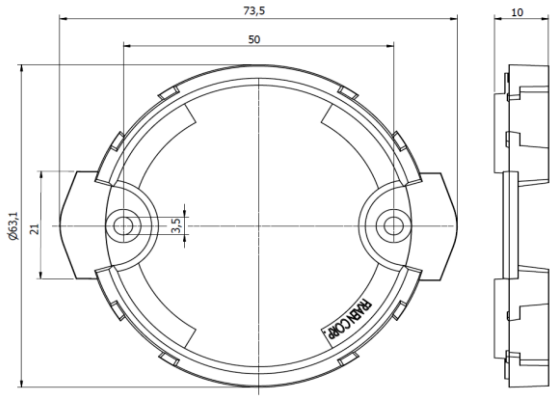

Mögliche Halter / COB Kombinationen / Holder / COB combinations FRAEN FNL-N1-75

COB Hersteller COB Supplier	COB Typ COB Type	Halter Holder	Adapter Base part
VS Lighting	DMS 102 ***W	434 Typ F1	FTS-FNL 7551 B
VS Lighting	DMS 124 ***W	434 Typ F1	FTS-FNL 7551 B
VS Lighting	DMS 125 / 126 / 128 ***W	433 Typ F1	FTS-FNL 7551 B
VS Lighting	DMS 120 ***W	431 Typ F1	FTS-FNL 7551 B
VS Lighting	DMS 12C / 18B ***W	431 Typ F1	FTS-FNL 7551 B
VS Lighting	DMS 1208J	433 Typ F1	FTS-FNL 7551 B
VS Lighting	DMS 1212J / 1812J	431 Typ F1	FTS-FNL 7551 B
VS Lighting	VCA2 122 / 123 / 124	486 Typ F1	FTS-FNL 7551 B
VS Lighting	VCA2 126 / 128	477 Typ F1	FTS-FNL 7551 B
VS Lighting	VCA2 1211 / 1213	471 Typ F1	FTS-FNL 7551 B
VS Lighting	TW 1914 Tunable	493 Typ F1	FTS-FNL 7551 B
VS Lighting	TW 2820 Tunable	494 Typ F1	FTS-FNL 7551 B

Mögliche Halter / COB Kombinationen / Holder / COB combinations FRAEN FNL-N1-75

COB Hersteller COB Supplier	COB Typ COB Type	Halter Holder	Adapter Base part
VS Lighting	WU-M-618 DimToWarm	434 Typ F1	FTS-FNL 7551 B

GAGGIONE

Reflektor Ø45 AF **LLR01N**

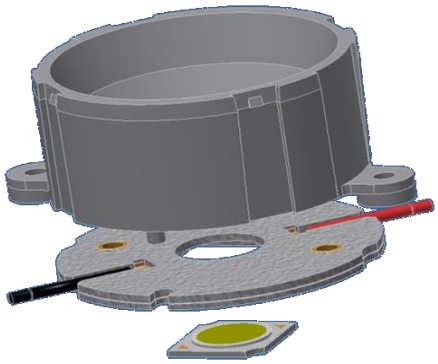

Gaggione Reflektor Gaggione reflector	LLR01N11AE1
Hersteller Webseite Manufacturer website	www.optic-gaggione.com
LED Halter B+W LED Holder B+W	4xx / Typ G1

4xx Typ G1

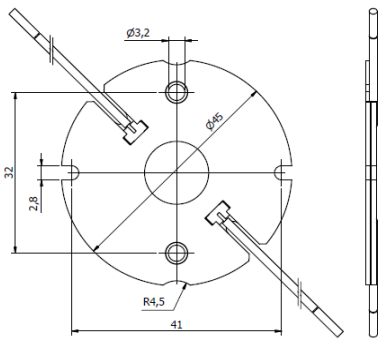

LLR01N11AE1

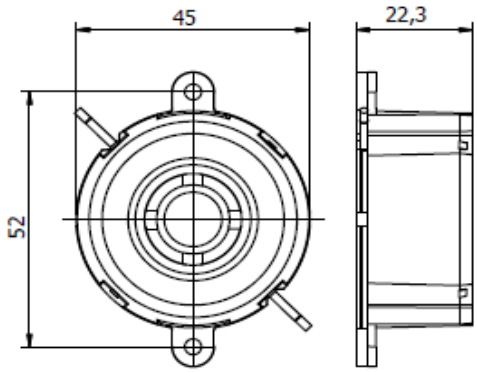

Mögliche Halter / COB Kombinationen / Holder / COB combinations **Gaggione LLR01N**

COB Hersteller COB Supplier	COB Typ COB Type	Halter Holder	Reflektor Reflector
VS Lighting	DMS 102 ***W	434 Typ G1	LLR01N11AE1
VS Lighting	DMS 124 ***W	434 Typ G1	LLR01N11AE1
VS Lighting	VCA 042	486 Typ G1	LLR01N11AE1
VS Lighting	VCA2 122 / 123 / 124	486 Typ G1	LLR01N11AE1
VS Lighting	WU-M-618 DimToWarm	434 Typ G1	LLR01N11AE1

GAGGIONE

Reflektor Ø70 AF **LLR05N**

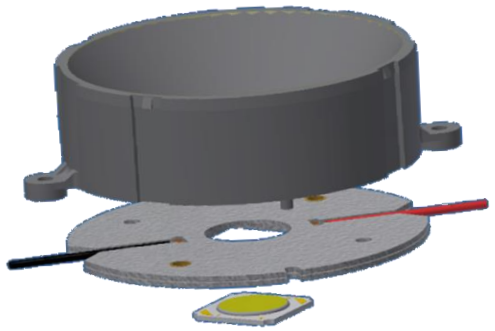

Gaggione Reflektor Gaggione reflector	LLR05N11AC1
Hersteller Webseite Manufacturer website	www.optic-gaggione.com
LED Halter B+W LED Holder B+W	4xx / Typ G2

4xx Typ G2

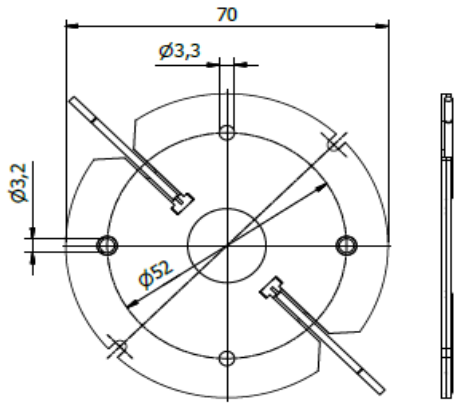

LLR05N11AC1

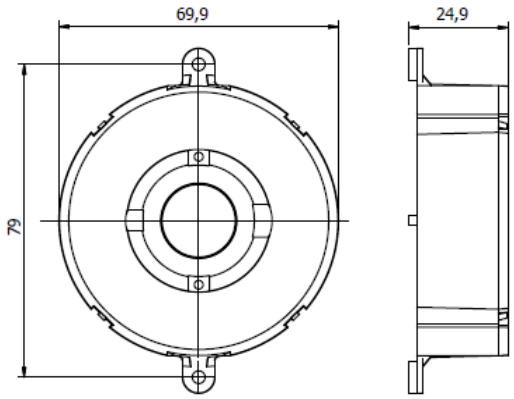

Mögliche Halter / COB Kombinationen / Holder / COB combinations **Gaggione LLR05N**

COB Hersteller COB Supplier	COB Typ COB Type	Halter Holder	Reflektor Reflector
VS Lighting	DMS 102 ***W	434 Typ G2	LLR05N11AC1
VS Lighting	DMS 124 ***W	434 Typ G2	LLR05N11AC1
VS Lighting	DMS 125 / 126 / 128 ***W	433 Typ G2	LLR05N11AC1
VS Lighting	DMS 120 ***W	431 Typ G2	LLR05N11AC1
VS Lighting	DMS 12C / 18B ***W	431 Typ G2	LLR05N11AC1
VS Lighting	DMS 1208J	433 Typ G2	LLR05N11AC1
VS Lighting	DMS 1212J / 1812J	431 Typ G2	LLR05N11AC1
VS Lighting	VCA 042	486 Typ G2	LLR05N11AC1
VS Lighting	VCA2 122 / 123 / 124	486 Typ G2	LLR05N11AC1
VS Lighting	VCA2 126 / 128	477 Typ G2	LLR05N11AC1
VS Lighting	VCA2 1211 / 1213	471 Typ G2	LLR05N11AC1
VS Lighting	TW 1914 Tunable	493 Typ G2	LLR05N11AC1
VS Lighting	TW 2820 Tunable	494 Typ G2	LLR05N11AC1

Mögliche Halter / COB Kombinationen / Holder / COB combinations **Gaggione LLR05N**

COB Hersteller COB Supplier	COB Typ COB Type	Halter Holder	Reflektor Reflector
VS Lighting	WU-M-618 DimToWarm	434 Typ G2	LLR05N11AC1

GAGGIONE

LLC05.. / LLC15.. / LLC25..
32mm Collimator series

Gaggione Linse / Halter Gaggione lenses / holder	LLC05xx PC, PMMA or Silicone Collimator LLC15xx PC, PMMA or Silicone Collimator LLC25xx PC or PMMA Collimator LLH02CB10.. holder *for all versions*
Hersteller Webseite Manufacturer website	www.optic-gaggione.com
LED Halter B+W LED Holder B+W	4xx / Typ K3

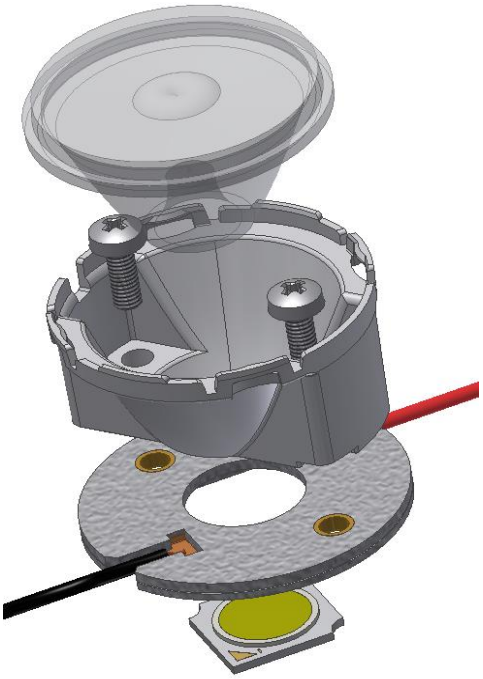

4xx Typ K3

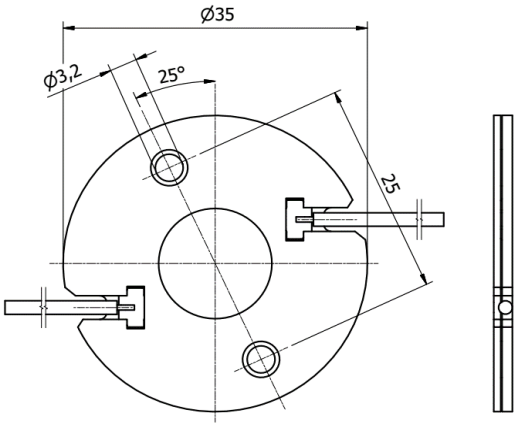

Collimator with holder

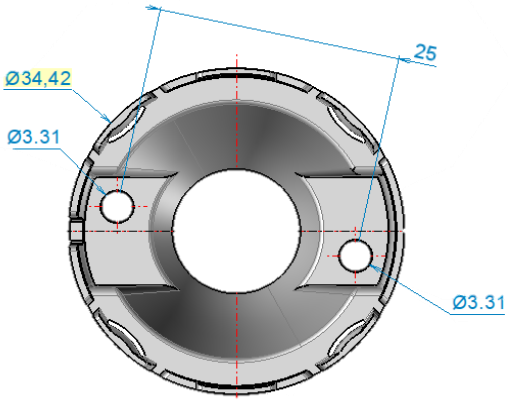

Mögliche Halter / COB Kombinationen / Holder / COB combinations **Gaggione LLC15**

COB Hersteller COB Supplier	COB Typ COB Type	Halter Holder	Linsen-Halter Lense-Holder
VS Lighting	DMS 102 ***W	434 Typ K3	LLH02CB10.. Holder
VS Lighting	DMS 124 ***W	434 Typ K3	LLH02CB10.. Holder
VS Lighting	VCA 042	486 Typ K3	LLH02CB10.. Holder
VS Lighting	VCA2 122 / 123 / 124	486 Typ K3	LLH02CB10.. Holder
VS Lighting	WU-M-618 DimToWarm	434 Typ K3	LLH02CB10.. Holder

GAGGIONE

LLH66B1 System Bayonet50G

Gaggione Linse / Halter Gaggione lenses / holder	LLH66B1.. Base *for both versions* HADAR70 (-ZOOM) LLC66 LLC79 VEGA45 SIRIUS50 (-ZOOM) UFO45 (-ZOOM) UFO67 (-ZOOM)
Hersteller Webseite Manufacturer website	www.optic-gaggione.com
LED Halter B+W LED Holder B+W	4xx / Typ Z1

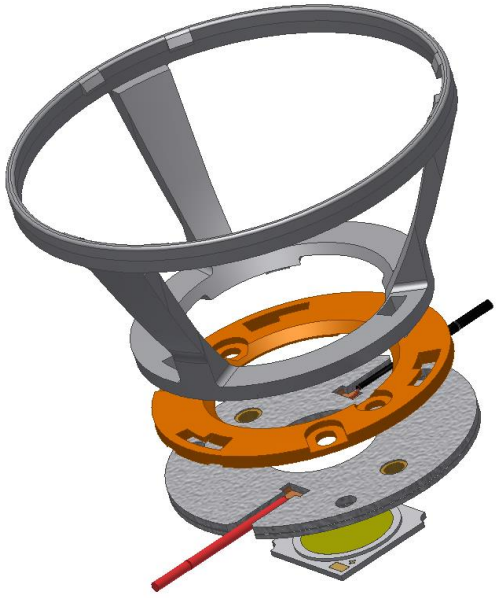

4xx Typ Z1

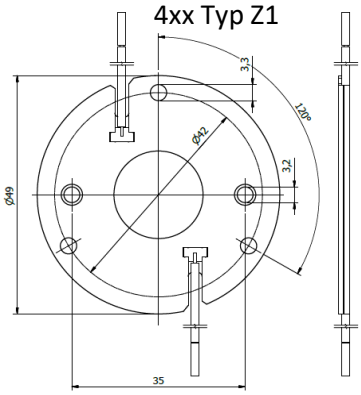

Suitable optics

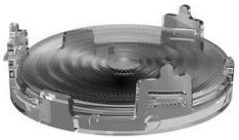

UFO45Z
45mm low-profile
Zoom collimator

UFO67Z
67mm low-profile
Zoom collimator

UFO67
67mm low-profile
Fresnel collimator

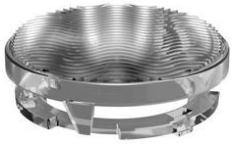

UFO45A
45mm low-profile
Wall washer

LLC79
45mm silicone
collimator

VEGA45
45mm PMMA
collimator

SIRIUS50
50mm ZOOM
collimator

LLC66
67mm silicone collimator

HADAR70
70mm PMMA collimator

HADAR70
70mm ZOOM PMMA collimator

Mögliche Halter / COB Kombinationen / Holder / COB combinations Gaggione LLC66

COB Hersteller COB Supplier	COB Typ COB Type	Halter Holder	Linsenhalter Lense holder
VS Lighting	DMS 102 ***W	434 Typ Z1	LLH066B1..
VS Lighting	DMS 124 ***W	434 Typ Z1	LLH066B1..
VS Lighting	DMS 125 / 126 / 128 ***W	433 Typ Z1	LLH066B1..
VS Lighting	DMS 120 ***W	431 Typ Z1	LLH066B1..
VS Lighting	DMS 1208J	433 Typ Z1	LLH066B1..
VS Lighting	VCA 042	486 Typ Z1	LLH066B1..
VS Lighting	VCA2 122 / 123 / 124	486 Typ Z1	LLH066B1..
VS Lighting	VCA2 126 / 128	477 Typ Z1	LLH066B1..
VS Lighting	TW 1914 Tunable	493 Typ Z1	LLH066B1..
VS Lighting	WU-M-618 DimToWarm	434 Typ Z1	LLH066B1..

JORDAN

Serie 75

Jordan Reflektor
Jordan reflector

112991S03101 - Spot
113238S03101 - Medium
113239S03101 - Flood

Hersteller Webseite
Manufacturer website

www.jordan-reflektoren.de

LED Halter B+W
LED Holder B+W

4xx / Typ Z1

4xx Typ Z1

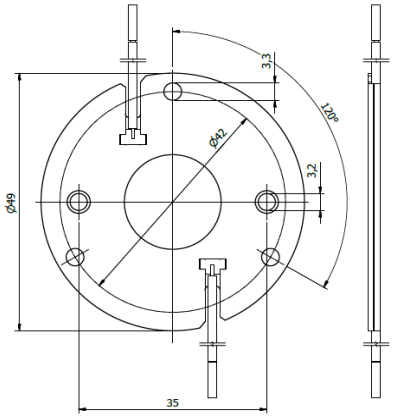

11xxxxS03101*

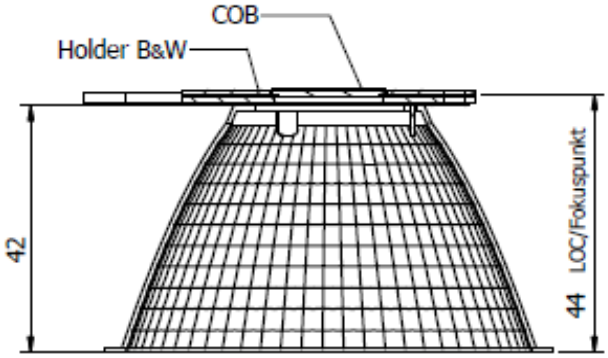

Mögliche Halter / COB Kombinationen / Holder / COB combinations Jordan Serie 75

COB Hersteller COB Supplier	COB Typ COB Type	Halter Holder	Reflektor Reflector
VS Lighting	DMS 102 ***W	434 Typ Z1	11xxxxS03101
VS Lighting	DMS 124 ***W	434 Typ Z1	11xxxxS03101
VS Lighting	DMS 125 / 126 / 128 ***W	433 Typ Z1	11xxxxS03101
VS Lighting	DMS 120 ***W	431 Typ Z1	11xxxxS03101
VS Lighting	DMS 12C / 18B ***W	431 Typ Z1	11xxxxS03101
VS Lighting	DMS 1208J	433 Typ Z1	11xxxxS03101
VS Lighting	DMS 1212J / 1812J	431 Typ Z1	11xxxxS03101
VS Lighting	VCA2 122 / 123 / 124	486 Typ Z1	11xxxxS03101
VS Lighting	VCA2 126 / 128	477 Typ Z1	11xxxxS03101
VS Lighting	VCA2 1211 / 1213	471 Typ Z1	11xxxxS03101
VS Lighting	TW 1914 Tunable	493 Typ Z1	11xxxxS03101
VS Lighting	TW 2820 Tunable	494 Typ Z1	11xxxxS03101
VS Lighting	WU-M-618 DimToWarm	434 Typ Z1	11xxxxS03101

KHATOD® Optical Solutions for LED Lighting

COSMO

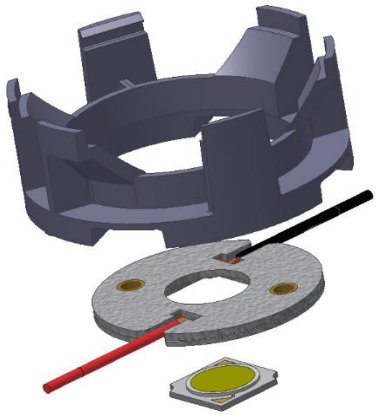

Khatod Linse Khatod lenses	PLL 2010.. 50mm PLL 2009.. 70mm PLL 2008.. 90mm
Hersteller Webseite Manufacturer website	www.khatod.com
LED Halter B+W LED Holder B+W	4xx / Typ K3 (PLL2010) 4xx / Typ Z1 (PLL2008/9)

4xx Typ K3

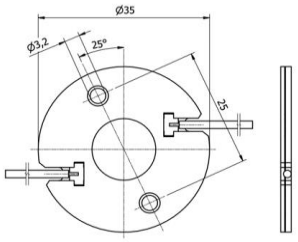

4xx Typ Z1

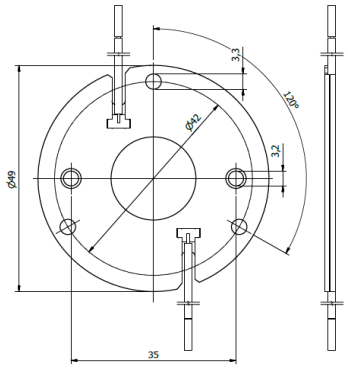

KEL 2010
lense holder for PLL2010

KEL2009
lense holder for PLL2009

KEL 2008
lense holder for PLL2008

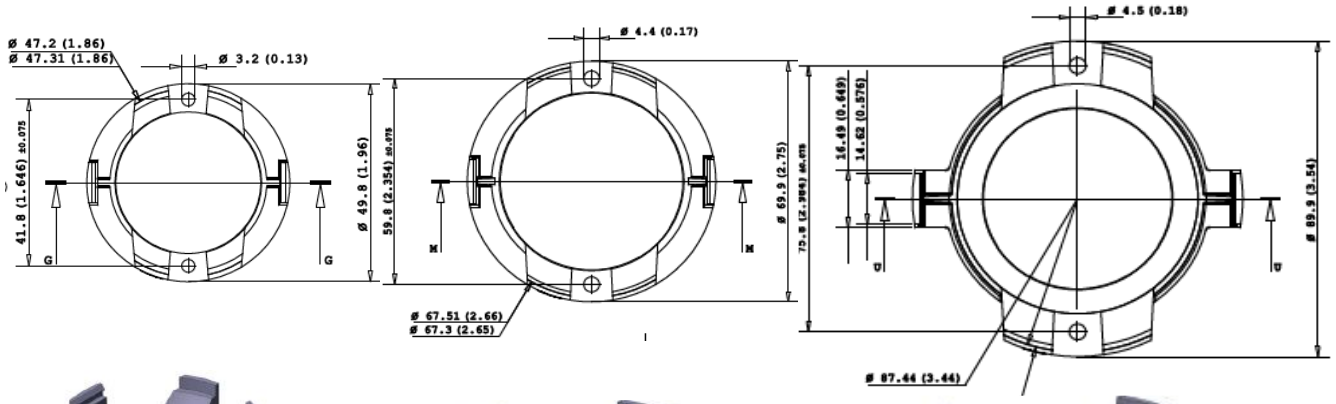

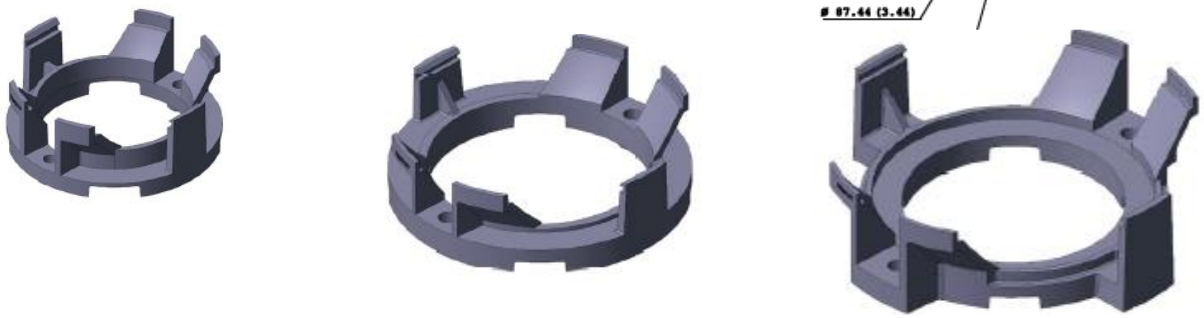

Mögliche Halter / COB Kombinationen / Holder / COB combinations Khatod Cosmo

COB Hersteller COB Supplier	COB Typ COB Type	Halter Holder	Linse Lense
VS Lighting	DMS 102 ***W	434 Typ K3	PLL2010.. + KEL2010 50mm
VS Lighting	DMS 124 ***W	434 Typ K3	PLL2010.. + KEL2010 50mm
VS Lighting	DMS 125 / 126 / 128 ***W	433 Typ Z1	PLL2009.. + KEL2009 70mm
VS Lighting	DMS 120 ***W	431 Typ Z1	PLL2008.. + KEL2008 90mm
VS Lighting	DMS 12C / 18B ***W	431 Typ Z1	PLL2008.. + KEL2008 90mm
VS Lighting	DMS 1208J	433 Typ Z1	PLL2009.. + KEL2009 70mm
VS Lighting	DMS 1212J / 1812J	431 Typ Z1	PLL2008.. + KEL2008 90mm
VS Lighting	VCA 042	486 Typ K3	PLL2010.. + KEL2010 50mm
VS Lighting	VCA2 122 / 123 / 124	486 Typ K3	PLL2010.. + KEL2010 50mm
VS Lighting	VCA2 126 / 128	477 Typ Z1	PLL2009.. + KEL2009 70mm
VS Lighting	VCA2 1211 / 1213	471 Typ Z1	PLL2008.. + KEL2008 90mm
VS Lighting	TW 1914 Tunable	493 Typ Z1	PLL2009.. + KEL2009 70mm
VS Lighting	TW 2820 Tunable	494 Typ Z1	PLL2008.. + KEL2008 90mm
VS Lighting	WU-M-618 DimToWarm	434 Typ K3	PLL2010.. + KEL2010 50mm

KHATOD® Optical Solutions for LED Lighting

EASY reflector system

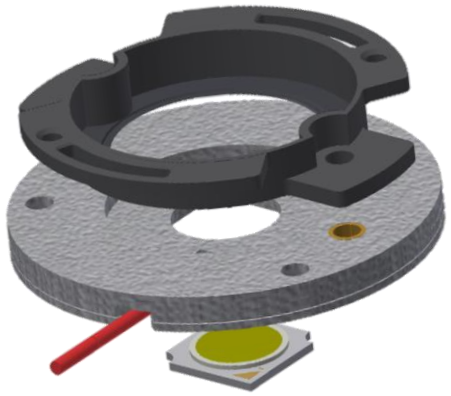

Khatod Reflektor Khatod reflector	KCLP 1856 / 1857 KCLP 1858 KCLP 1859
Hersteller Webseite Manufacturer website	www.khatod.com
LED Halter B+W LED Holder B+W	4xx / Typ Z2 4xx / Typ Z3

4xx Typ Z2

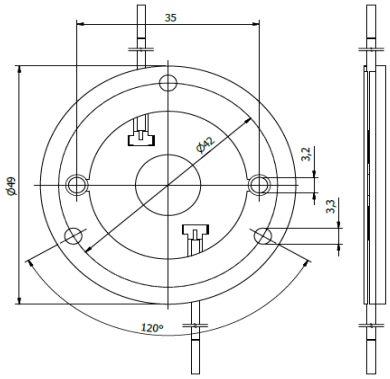

4xx Typ Z3

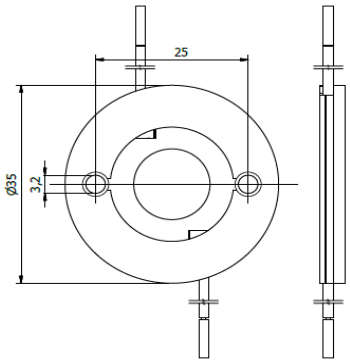

KCLP1856/1857
50mm reflector

KCLP1858
72mm reflector

KCLP1859
110 mm reflector

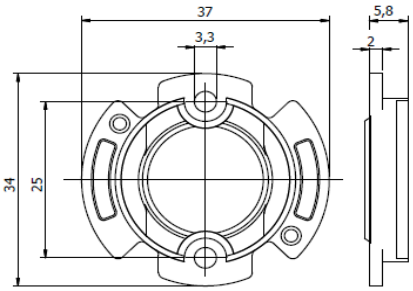

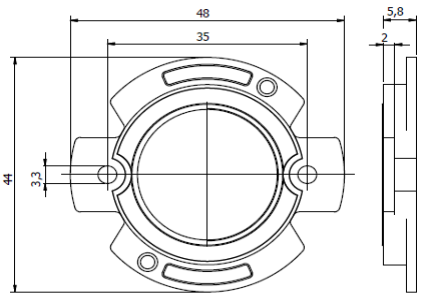

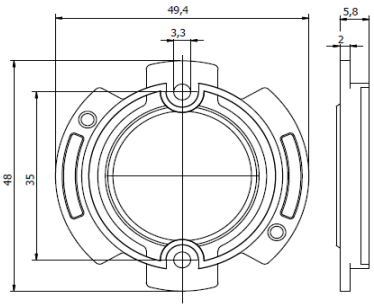

Mögliche Halter / COB Kombinationen / Holder / COB combinations **Khatod Easy**

COB Hersteller COB Supplier	COB Typ COB Type	Halter Holder	Reflektor Reflector
VS Lighting	DMS 102 ***W	434 Typ Z3	KCLP 1856 / 1857 (50mm)
VS Lighting	DMS 124 ***W	434 Typ Z3	KCLP 1856 / 1857 (50mm)
VS Lighting	DMS 125 / 126 / 128 ***W	433 Typ Z2	KCLP 1858 (72mm)
VS Lighting	DMS 120 ***W	431 Typ Z2	KCLP 1859 (110mm)
VS Lighting	DMS 1208J	433 Typ Z2	KCLP 1858 (72mm)

Mögliche Halter / COB Kombinationen / Holder / COB combinations Khatod Easy

COB Hersteller COB Supplier	COB Typ COB Type	Halter Holder	Reflektor Reflector
VS Lighting	VCA 042	486 Typ Z3	KCLP 1856 / 1857 (50mm)
VS Lighting	VCA2 122 / 123 / 124	486 Typ Z3	KCLP 1856 / 1857 (50mm)
VS Lighting	VCA2 126 / 128	477 Typ Z2	KCLP 1858 (72mm)
VS Lighting	TW 1914 Tunable	493 Typ Z2	KCLP 1858 (72mm)
VS Lighting	WU-M-618 DimToWarm	434 Typ Z3	KCLP 1856 / 1857 (50mm)

KHATOD®
Optical Solutions for LED Lighting

EASY
reflector system
Asymmetric

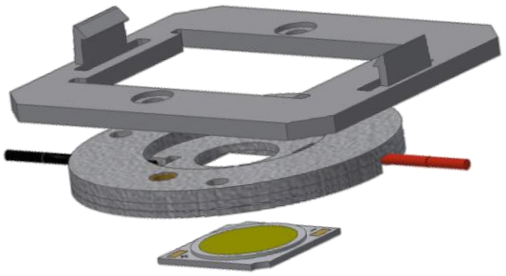

Khatod Adapter
Khatod adaptor
KCLP 1799

Hersteller Webseite
Manufacturer website
www.khatod.com

LED Halter B+W
LED Holder B+W
4xx / Typ Z2

4xx Typ Z2

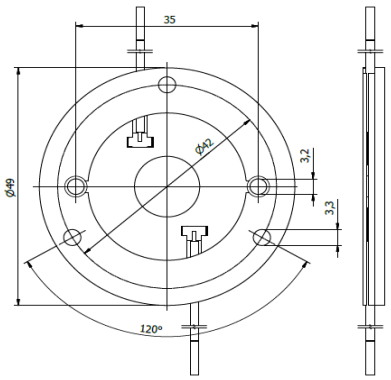

KCLP 1799

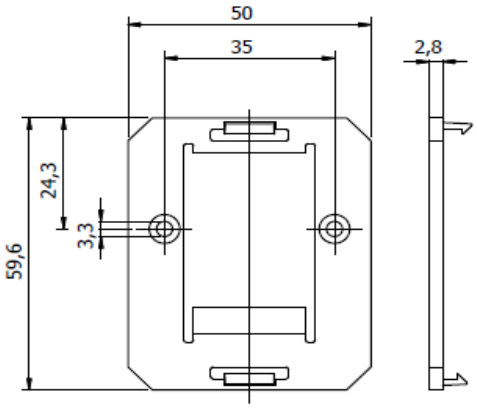

Mögliche Halter / COB Kombinationen / Holder / COB combinations **Khatod Easy asym.**

COB Hersteller COB Supplier	COB Typ COB Type	Halter Holder	Reflektor Reflector
VS Lighting	DMS 124 ***W	434 Typ Z2	KCLP 1799
VS Lighting	DMS 125 / 126 / 128 ***W	433 Typ Z2	KCLP 1799
VS Lighting	DMS 120 ***W	431 Typ Z2	KCLP 1799
VS Lighting	DMS 1208J	433 Typ Z2	KCLP 1799
VS Lighting	VCA2 122 / 123 / 124	486 Typ Z2	KCLP 1799
VS Lighting	VCA2 126 / 128	477 Typ Z2	KCLP 1799
VS Lighting	TW 1914 Tunable	493 Typ Z2	KCLP 1799
VS Lighting	WU-M-618 DimToWarm	434 Typ Z2	KCLP 1799

KHATOD® Optical Solutions for LED Lighting

PL50SIL Silicone Lense

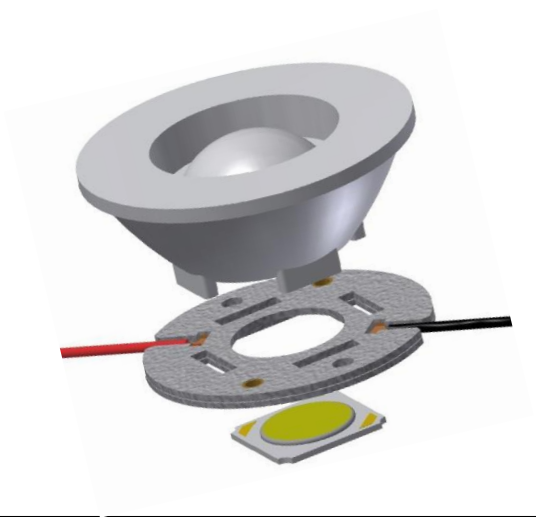

Khatod Linse
Khatod lense — PL50SIL

Hersteller Webseite
Manufacturer website — www.khatod.com

LED Halter B+W
LED Holder B+W — 4xx / Typ K2

4xx Typ K2

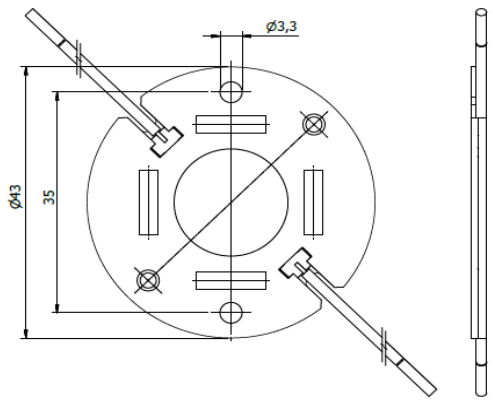

PL50SIL

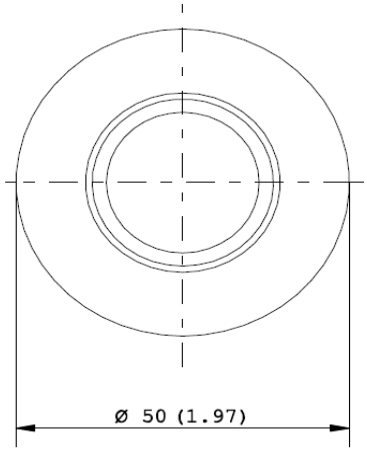

Mögliche Halter / COB Kombinationen / Holder / COB combinations **Khatod PL50SIL**

COB Hersteller COB Supplier	COB Typ COB Type	Halter Holder	Linse Lense
VS Lighting	DMS 102 ***W	434 Typ K2	PL50SIL
VS Lighting	DMS 124 ***W	434 Typ K2	PL50SIL
VS Lighting	DMS 125 / 126 / 128 ***W	433 Typ K2	PL50SIL
VS Lighting	DMS 1208J	433 Typ K2	PL50SIL
VS Lighting	VCA 042	486 Typ K2	PL50SIL
VS Lighting	VCA2 122 / 123 / 124	486 Typ K2	PL50SIL
VS Lighting	VCA2 126 / 128	477 Typ K2	PL50SIL
VS Lighting	TW 1914 Tunable	493 Typ K2	PL50SIL
VS Lighting	WU-M-618 DimToWarm	434 Typ K2	PL50SIL

KHATOD® Optical Solutions for LED Lighting

SiO3
SiO3 Junior

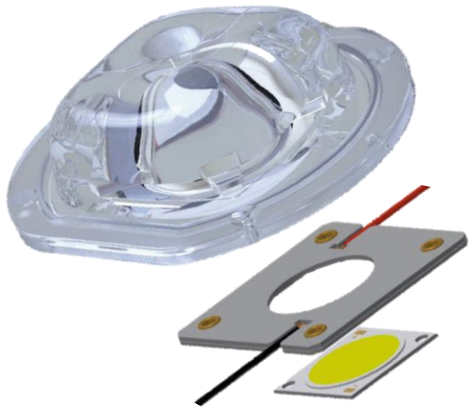

Khatod Linse
Khatod lense

Khatod partnumbers

Hersteller Webseite
Manufacturer website

www.khatod.com

LED Halter B+W
LED Holder B+W

4xx / Typ K1

4xx Typ K1

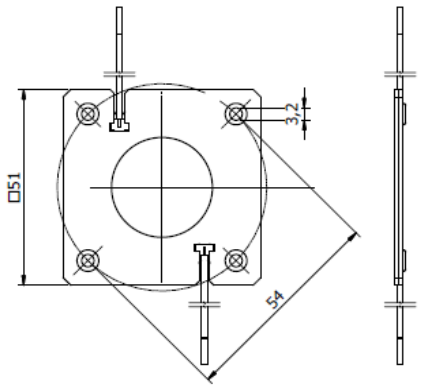

Mögliche Halter / COB Kombinationen / Holder / COB combinations **Khatod SiO3**

COB Hersteller COB Supplier	COB Typ COB Type	LES LES	Halter Holder	Linse Lense
VS Lighting	DMS 124 ***W	9 mm	434 Typ K1	see Khatod website
VS Lighting	DMS 125 / 126 / 128 ***W	14 mm	433 Typ K1	see Khatod website
VS Lighting	DMS 120 ***W	17 mm	431 Typ K1	see Khatod website
VS Lighting	DMS 12C / 18B ***W	20 mm	431 Typ K1	see Khatod website
VS Lighting	DMS 1208J	15 mm	433 Typ K1	see Khatod website
VS Lighting	DMS 1212J / 1812J	22 mm	431 Typ K1	see Khatod website
VS Lighting	VCA2 122 / 123 / 124	9 mm	486 Typ K1	see Khatod website
VS Lighting	VCA2 126 / 128	14 mm	477 Typ K1	see Khatod website
VS Lighting	VCA2 1211 / 1213	20 mm	471 Typ K1	see Khatod website
VS Lighting	TW 1914 Tunable	14 mm	493 Typ K1	see Khatod website
VS Lighting	TW 2820 Tunable	20 mm	494 Typ K1	see Khatod website
VS Lighting	WU-M-618 DimToWarm	10 mm	434 Typ K1	see Khatod website

KHATOD® Optical Solutions for LED Lighting

SIR50 Silicone Lense

Khatod Linse Khatod lense	SIR50
Hersteller Webseite Manufacturer website	www.khatod.com
LED Halter B+W LED Holder B+W	4xx / Typ K3

4xx Typ K3

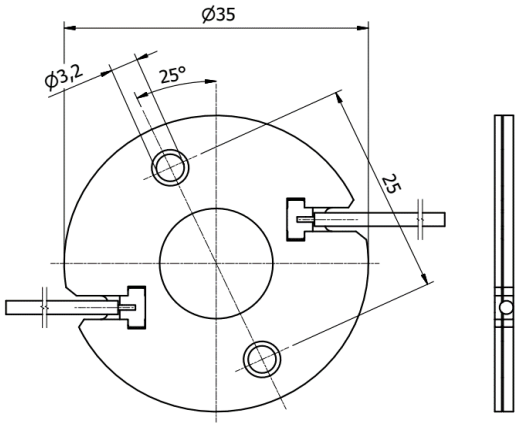

SIR50

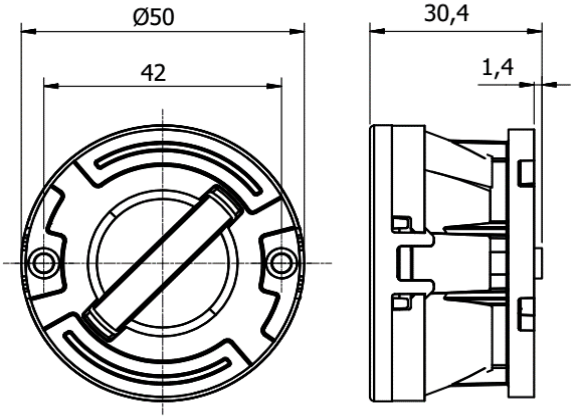

Mögliche Halter / COB Kombinationen / Holder / COB combinations **Khatod SIR50**

COB Hersteller COB Supplier	COB Typ COB Type	Halter Holder	Linse Lense
VS Lighting	DMS 102 ***W	434 Typ K3	KEPLL1994…
VS Lighting	DMS 124 ***W	434 Typ K3	KEPLL1994…
VS Lighting	VCA2 122 / 123 / 124	486 Typ K3	KEPLL1994…
VS Lighting	WU-M-618 DimToWarm	434 Typ K3	KEPLL1994…

LEDiL®

™2X2mx

2x2MX System

LEDiL® and 2X2MX are registered trademarks of Ledil Oy in the European Union, the U.S.A and certain other countries.

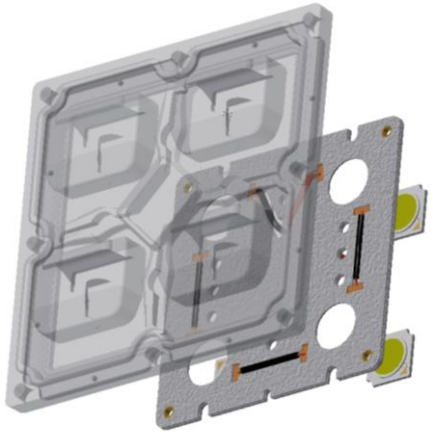

LEDiL Optik LEDiL optics	STRADA 2x2MX STRADA 2x2MXS
Hersteller Webseite Manufacturer website	www.ledil.com
LED Halter B+W LED Holder B+W	4xx / Typ 2x2MX HV

Holder 4xx Type 2x2MX HV

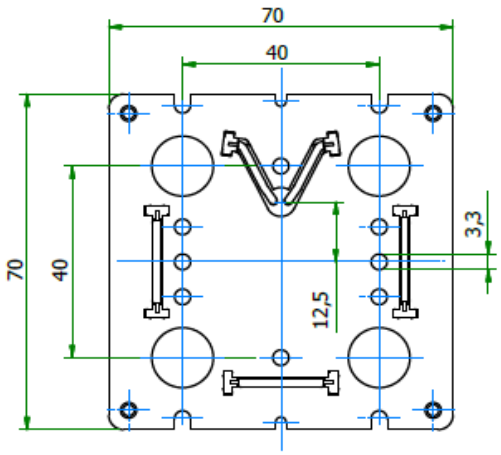

e.g. LEDiL Strada 2x2MXS DWC2

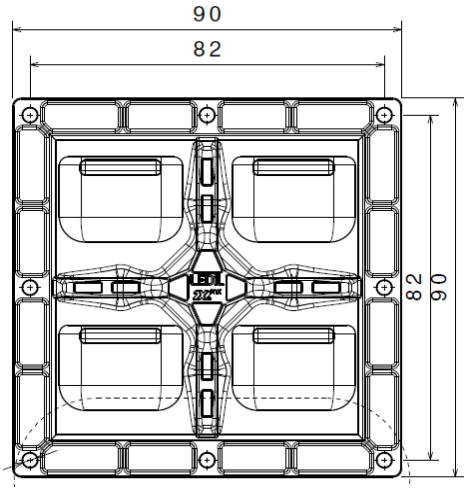

Passende Kühlkörper / Suitable heat sinks:

MechaTronix

CoolBlock SQ
CoolBeam SQ

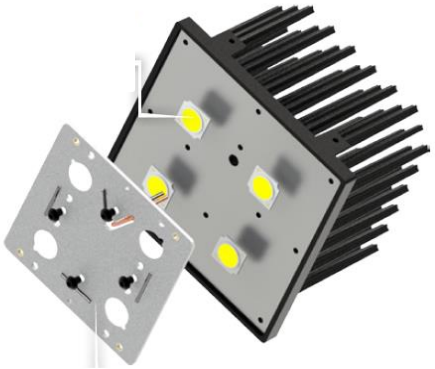

MechaTronix Cooler MechaTronix Cooler	CoolBlock SQ-01
Hersteller Webseite Manufacturer website	www.led-heatsink.com

Die dargestellten Halterlösungen sind Mehrfachhalter, bei denen die COBs im Halter in Serie geschaltet werden. Daher muss bei Serienschaltungen von mehreren Modulen die gesamte Vorwärtsspannung betrachtet werden.
The described holder solution is a multiple COB holder where all COBs are prewired in a serial connection. Therefore the total forward voltage maybe critical if holders are connected in series.

COB forward Voltage **36 V** (Standard)		COB forward Voltage **18 V** (special versions like Citizen CLU028 0604 or CREE 1512 available)	
holder rated voltage **150V DC**	holder rated voltage **450V DC** by using **insulating TIM**	holder rated voltage **150V DC**	holder rated voltage **450V DC** by using **insulating TIM**
single use only	up to **2 holders** in series	up to **2 holders** in series	up to **4 holders** in series

Die max. Ausgangsspannung des LED Treibers kann eine Veränderung der o.g. Anordnung zur Folge haben und muss daher überprüft werden.
The max output voltage may have an influence on the proposal above and need to be checked.

Mögliche Halter / COB Kombinationen / Holder / COB combinations 2x2MX System

COB Hersteller COB Supplier	COB Typ COB Type	Halter Holder	Adapter Base part
VS Lighting	**DMS 102 ***W**	**434 Typ 2x2MX HV**	**see LEDiL website**
VS Lighting	**DMS 124 ***W**	**434 Typ 2x2MX HV**	**see LEDiL website**
VS Lighting	**VCA 042**	**486 Typ 2x2MX HV**	**see LEDiL website**
VS Lighting	**VCA2 122 / 123 / 124**	**486 Typ 2x2MX HV**	**see LEDiL website**
VS Lighting	**WU-M-618 DimToWarm**	**434 Typ 2x2MX HV**	**see LEDiL website**

LEDiL®

CLAMP System
(3 Hook)

Passende LEDiL Optik **Suitable** LEDiL optics	**ANGELA** **ANGELETTE** **ANGELINA** **MOLLY** **RONDA**
LEDiL Adapter LEDiL adaptor	C13658_CLAMP-VERO13-18 C13584_CLAMP-VERO29
Hersteller Webseite Manufacturer website	www.ledil.com
LED Halter B+W LED Holder B+W	4xx / Typ L1 4xx / Typ L2 4xx / Typ L3

4xx Typ L1

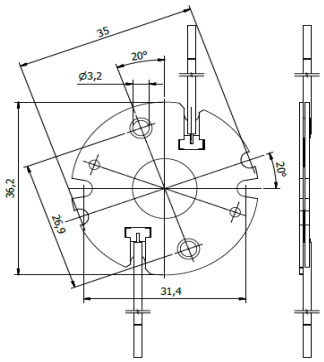

4xx Typ L2

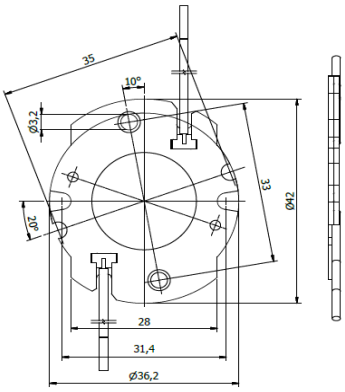

C13658_CLAMP-VERO13-18

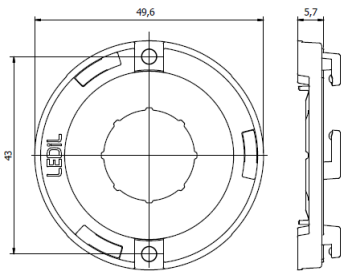

4xx Typ L3

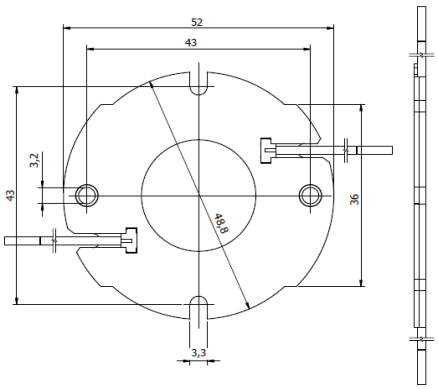

C13584_CLAMP-VERO29

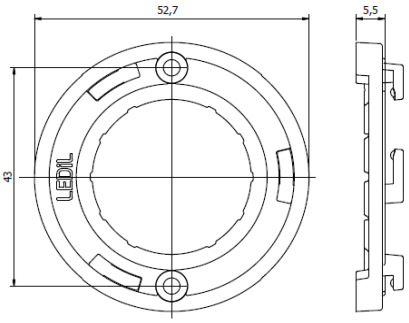

Mögliche Halter / COB Kombinationen / Holder / COB combinations LEDiL Clamp System

COB Hersteller COB Supplier	COB Typ COB Type	LES LES	Halter Holder	Adapter Base part
VS Lighting	DMS 124 ***W	9 mm	434 Typ L1	C13658_CLAMP-VERO13-18
VS Lighting	DMS 125 / 126 / 128 ***W	14 mm	433 Typ L1	C13658_CLAMP-VERO13-18
VS Lighting	DMS 120 ***W	17 mm	431 Typ L3	C13584_CLAMP-VERO29
VS Lighting	DMS 12C / 18B ***W	20 mm	431 Typ L3	C13584_CLAMP-VERO29
VS Lighting	DMS 1208J	15 mm	433 Typ L1	C13658_CLAMP-VERO13-18
VS Lighting	DMS 1212J / 1812J	22 mm	431 Typ L3	C13584_CLAMP-VERO29
VS Lighting	VCA2 122 / 123 / 124	9 mm	486 Typ L1	C13658_CLAMP-VERO13-18
VS Lighting	VCA2 126 / 128	14 mm	477 Typ L1	C13658_CLAMP-VERO13-18
VS Lighting	VCA2 1211 / 1213	20 mm	471 Typ L3	C13584_CLAMP-VERO29
VS Lighting	TW 1914 Tunable	14 mm	493 Typ L1	C13658_CLAMP-VERO13-18
VS Lighting	TW 2820 Tunable	20 mm	494 Typ L3	C13584_CLAMP-VERO29
VS Lighting	WU-M-618 DimToWarm	10 mm	434 Typ L1	C13658_CLAMP-VERO13-18

LEDiL®	HEKLA System
Passende LEDiL Optik Suitable LEDiL optics	**BARBARA-G2** **BROOKE / MIRELLA -G2** **ADELIA 50/70/110** **CARMEN 50/70** **ZORYA, RONDA, WINNIE** **AMY / AMY ZOOM 50/70** **YASMEEN / Y.ZOOM 50/70** **ILONA / ILONA ZOOM**
LEDiL Adapter LEDiL adaptor	C16142_HEKLA-SOCKET-K
Hersteller Webseite Manufacturer website	www.ledil.com
LED Halter B+W LED Holder B+W	4xx / Typ L8

e.g. solution with BROOKE-G2 reflector

4xx Type L8
(eg. 489 Type L8 for Tunable COBs)

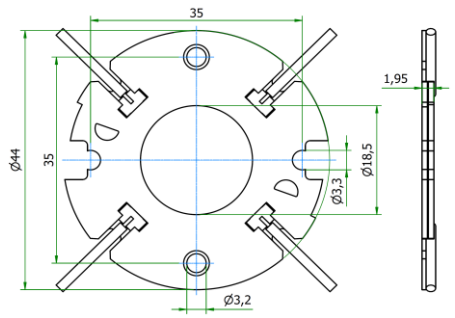

C16142 Hekla Socket K

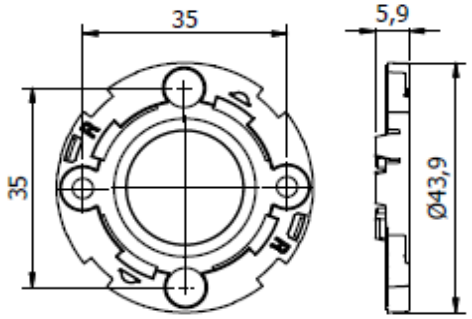

Mögliche Halter / COB Kombinationen / Holder / COB combinations LEDiL Hekla System

COB Hersteller COB Supplier	COB Typ COB Type	LES LES	Halter Holder	Adapter Base part
VS Lighting	DMS 102 ***W	6,0 mm	434 Typ L8	C16142_HEKLA-SOCKET-K
VS Lighting	DMS 124 ***W	9,0 mm	434 Typ L8	C16142_HEKLA-SOCKET-K
VS Lighting	DMS 125 / 126 / 128 ***W	13,8 mm	433 Typ L8	C16142_HEKLA-SOCKET-K
VS Lighting	DMS 1208J	14,5 mm	433 Typ L8	C16142_HEKLA-SOCKET-K
VS Lighting	VCA 042	3,9 mm	486 Typ L8	C16142_HEKLA-SOCKET-K
VS Lighting	VCA2 122 / 123 / 124	9,1 mm	486 Typ L8	C16142_HEKLA-SOCKET-K
VS Lighting	VCA2 126 / 128	13,8 mm	477 Typ L8	C16142_HEKLA-SOCKET-K
VS Lighting	TW 1914 Tunable	13,8 mm	493 Typ L8	C16142_HEKLA-SOCKET-K
VS Lighting	WU-M-618 DimToWarm	9,8 mm	434 Typ L8	C16142_HEKLA-SOCKET-K

LEDiL®

LENA
LENINA

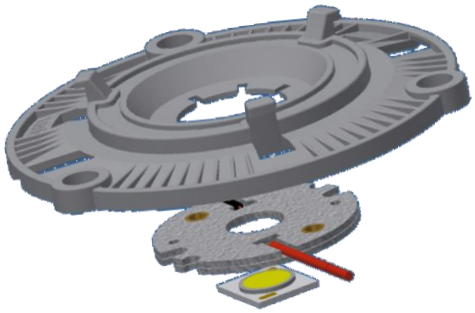

LEDiL Adapter LEDiL adaptor	C13868_LENA-STD-BASE-VERO13-18 C13867_LENA-STD-BASE-VERO29
Hersteller Webseite Manufacturer website	www.ledil.com
LED Halter B+W LED Holder B+W	4xx / Typ L1 4xx / Typ L2 4xx / Typ L3

4xx Typ L1

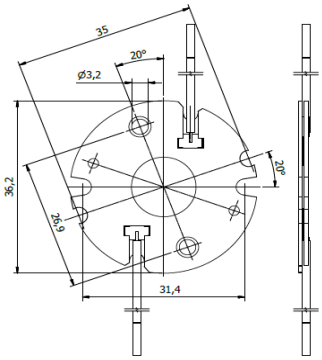

4xx Typ L2

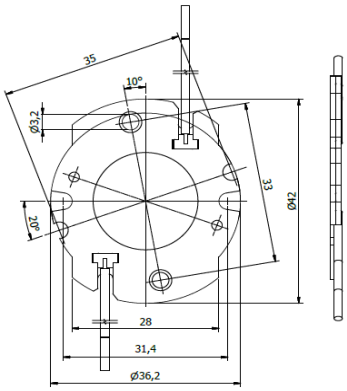

C13868_LENA-STD-BASE-VERO13-18

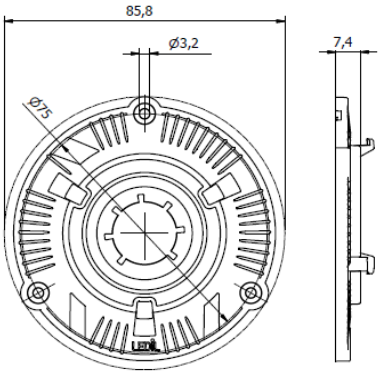

4xx Typ L3

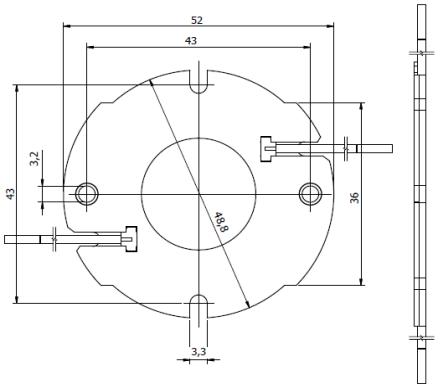

C13867_LENA-STD-BASE-VERO29

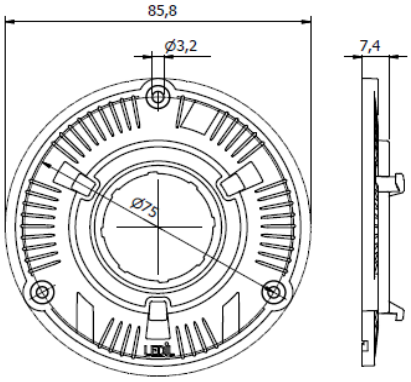

Mögliche Halter / COB Kombinationen / Holder / COB combinations LEDiL Lena

COB Hersteller COB Supplier	COB Typ COB Type	Halter Holder	Adapter Base part
VS Lighting	DMS 125 / 126 / 128 ***W	433 Typ L1	C13868_LENA-STD-BASE-VERO13-18
VS Lighting	DMS 120 ***W	431 Typ L3	C13867_LENA-STD-BASE-VERO29
VS Lighting	DMS 12C / 18B ***W	431 Typ L3	C13867_LENA-STD-BASE-VERO29
VS Lighting	DMS 1208J	433 Typ L1	C13868_LENA-STD-BASE-VERO13-18
VS Lighting	DMS 1212J / 1812J	431 Typ L3	C13867_LENA-STD-BASE-VERO29

Mögliche Halter / COB Kombinationen / Holder / COB combinations LEDiL Lena

COB Hersteller COB Supplier	COB Typ COB Type	Halter Holder	Adapter Base part
VS Lighting	VCA2 126 / 128	477 Typ L1	C13868_LENA-STD-BASE-VERO13-18
VS Lighting	VCA2 1211 / 1213	471 Typ L3	C13867_LENA-STD-BASE-VERO29
VS Lighting	TW 1914 Tunable	493 Typ L1	C13868_LENA-STD-BASE-VERO13-18
VS Lighting	TW 2820 Tunable	494 Typ L3	C13867_LENA-STD-BASE-VERO29
VS Lighting	WU-M-618 DimToWarm	434 Typ L1	C13868_LENA-STD-BASE-VERO13-18

LEDiL®

PF-SOCKET SYSTEM

Passende LEDiL Optik Suitable LEDiL optics	**BARBARA** **MIRELLA**
LEDiL Adapter LEDiL adaptor	C13709_PF-SOCKET-VERO13-18
Hersteller Webseite Manufacturer website	www.ledil.com
LED Halter B+W LED Holder B+W	4xx / Typ L1 4xx / Typ L2

MIRELLA
LES: max 14,5mm

BARBARA
LES: max 14,5mm

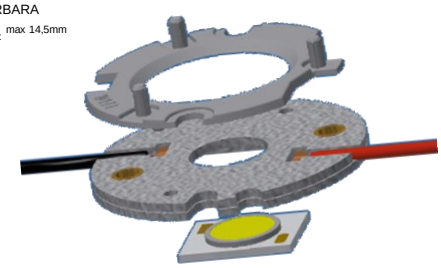

Für BARBARA-G2 und MIRELLA-G2 ist die passende Lösung unter LEDiL HEKLA aufgeführt
Take care that BARBARA-G2 and MIRELLA-G2 requieres a different solution available under LEDiL HEKLA

4xx Typ L1

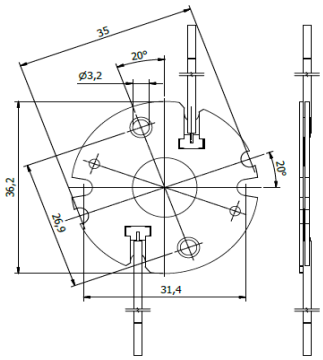

4xx Typ L2

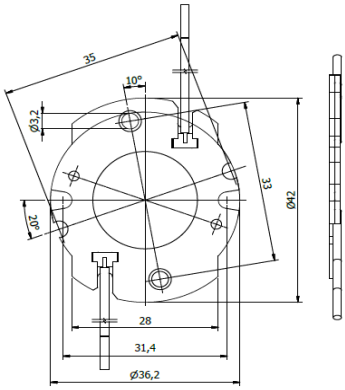

C13709_PF-SOCKET-VERO13-18

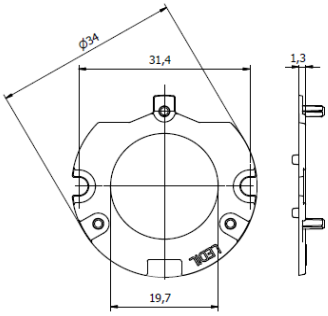

Mögliche Halter / COB Kombinationen / Holder / COB combinations LEDiL PF-Socket

COB Hersteller COB Supplier	COB Typ COB Type	LES LES	Halter Holder	Adapter Base part
VS Lighting	DMS 102 ***W	6 mm	434 Typ L1	C13709_PF-SOCKET-VERO13-18
VS Lighting	DMS 124 ***W	9 mm	434 Typ L1	C13709_PF-SOCKET-VERO13-18
VS Lighting	DMS 125 / 126 / 128 ***W	14 mm	433 Typ L1	C13709_PF-SOCKET-VERO13-18
VS Lighting	DMS 1208J	15 mm	433 Typ L1	C13709_PF-SOCKET-VERO13-18
VS Lighting	VCA 042	4 mm	486 Typ L1	C13709_PF-SOCKET-VERO13-18
VS Lighting	VCA2 122 / 123 / 124	9 mm	486 Typ L1	C13709_PF-SOCKET-VERO13-18
VS Lighting	VCA2 126 / 128	14 mm	477 Typ L1	C13709_PF-SOCKET-VERO13-18
VS Lighting	TW 1914 Tunable	14 mm	493 Typ L1	C13709_PF-SOCKET-VERO13-18

Mögliche Halter / COB Kombinationen / Holder / COB combinations LEDiL PF-Socket

COB Hersteller COB Supplier	COB Typ COB Type	LES LES	Halter Holder	Adapter Base part
VS Lighting	WU-M-618 DimToWarm	10 mm	434 Typ L1	C13709_PF-SOCKET-VERO13-18

LEDiL®

SAGA

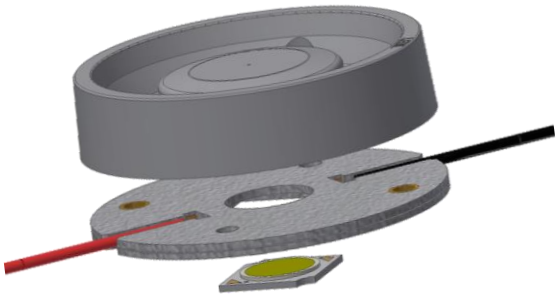

LEDiL Linse
LEDiL lense

CN13990_SAGA-HB-IP-WHT
FCA14933_SAGA-S-WHT

Hersteller Webseite
Manufacturer website

www.ledil.com

LED Halter B+W
LED Holder B+W

4xx / Typ L6

4xx Typ L6

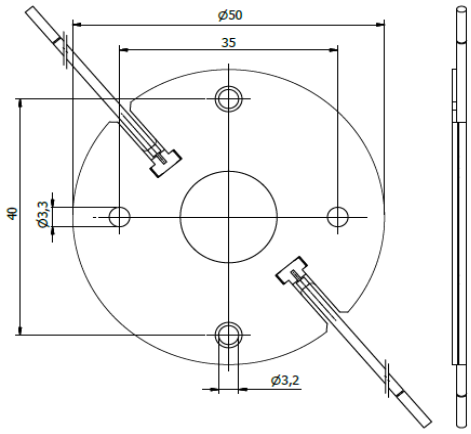

CN13990_SAGA-HB-IP-WHT

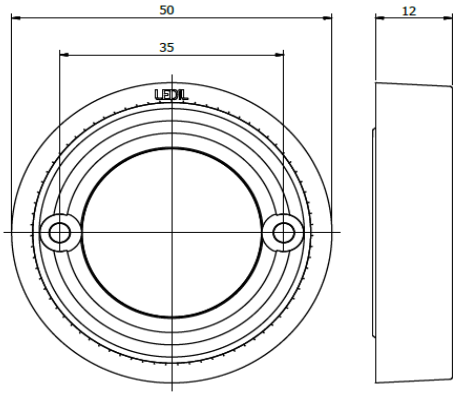

Mögliche Halter / COB Kombinationen / Holder / COB combinations LEDiL Saga

COB Hersteller COB Supplier	COB Typ COB Type	Halter Holder	Linse Lense
VS Lighting	DMS 102 ***W	434 Typ L6	CN13990_SAGA-HB-IP-WHT
VS Lighting	DMS 124 ***W	434 Typ L6	CN13990_SAGA-HB-IP-WHT
VS Lighting	DMS 125 / 126 / 128 ***W	433 Typ L6	CN13990_SAGA-HB-IP-WHT
VS Lighting	DMS 1208J	433 Typ L6	CN13990_SAGA-HB-IP-WHT
VS Lighting	VCA2 122 / 123 / 124	486 Typ L6	CN13990_SAGA-HB-IP-WHT
VS Lighting	VCA2 126 / 128	477 Typ L6	CN13990_SAGA-HB-IP-WHT
VS Lighting	TW 1914 Tunable	493 Typ L6	CN13990_SAGA-HB-IP-WHT
VS Lighting	WU-M-618 DimToWarm	434 Typ L6	CN13990_SAGA-HB-IP-WHT

LEDiL®

STELLA (Type L1)

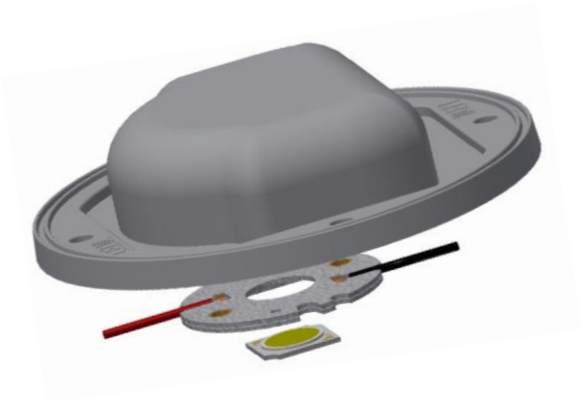

Passende LEDiL Optik Suitable LEDiL optics	**STELLA-A** LEDiL part numbers
Hersteller Webseite Manufacturer website	www.ledil.com
LED Halter B+W LED Holder B+W	4xx / Typ L1

4xx Typ L1

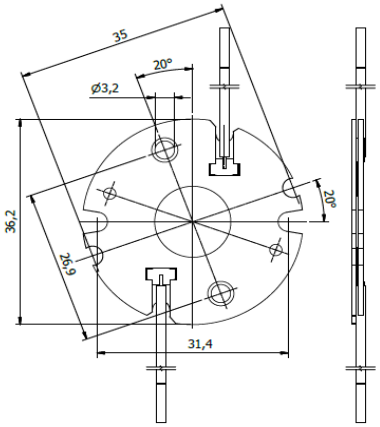

STELLA-A

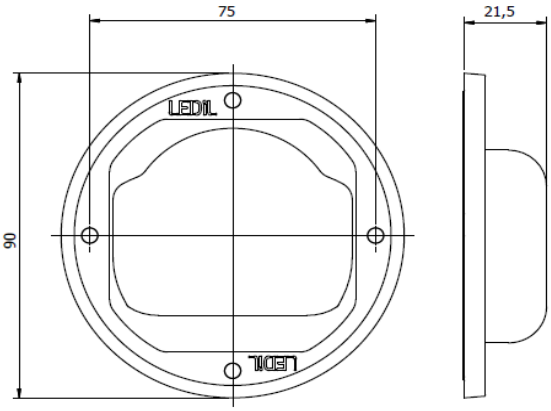

Mögliche Halter / COB Kombinationen / Holder / COB combinations **LEDiL Stella (L1)**

COB Hersteller COB Supplier	COB Typ COB Type	Halter Holder	Linse Lense
VS Lighting	DMS 124 ***W	434 Typ L1	FN13323_STELLA-A
VS Lighting	DMS 125 / 126 / 128 ***W	433 Typ L1	FN13323_STELLA-A
VS Lighting	DMS 1208J	433 Typ L1	FN13323_STELLA-A
VS Lighting	VCA2 122 / 123 / 124	486 Typ L1	FN13323_STELLA-A
VS Lighting	VCA2 126 / 128	477 Typ L1	FN13323_STELLA-A
VS Lighting	TW 1914 Tunable	493 Typ L1	FN13323_STELLA-A
VS Lighting	WU-M-618 DimToWarm	434 Typ L1	FN13323_STELLA-A

LEDiL®

STELLA
(Type L4)

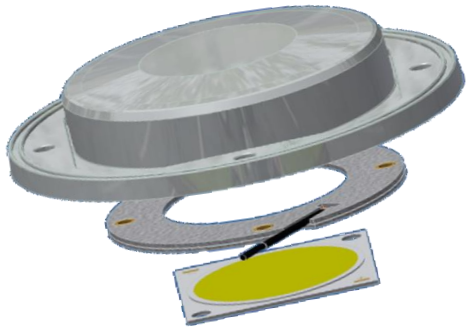

Passende LEDiL Optik Suitable LEDiL optics	**STELLA-HB** **STELLA-HB-WWW** **STELLA-FRESNEL** **STELLA-RS** **STELLA-G2-VSM** LEDiL part numbers
Hersteller Webseite Manufacturer website	www.ledil.com
LED Halter B+W LED Holder B+W	4xx / Typ L4

4xx / Typ L4

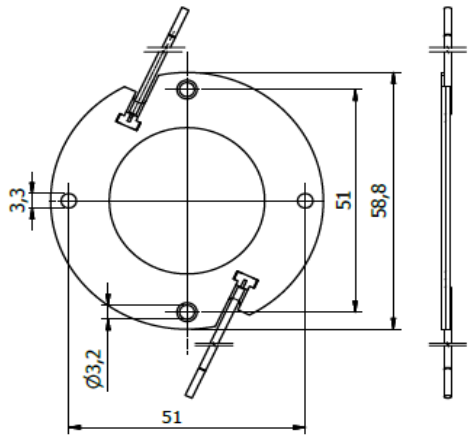

eg. STELLA-HB

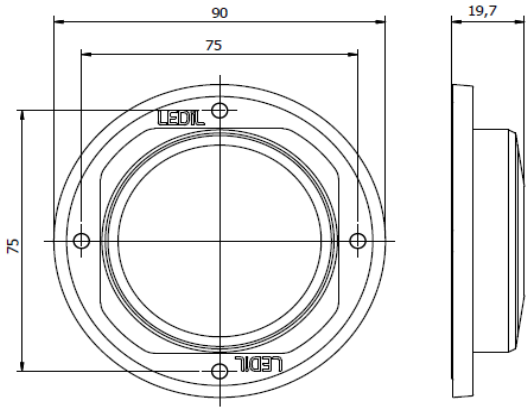

Mögliche Halter / COB Kombinationen / Holder / COB combinations **LEDiL STELLA (L4)**

COB Hersteller COB Supplier	COB Typ COB Type	Halter Holder	Linse Lense
VS Lighting	DMS 12C / 18B ***W	431 Typ L4	see LEDiL website
VS Lighting	DMS 1212J / 1812J	431 Typ L4	see LEDiL website
VS Lighting	VCA2 1211 / 1213	471 Typ L4	see LEDiL website
VS Lighting	TW 2820 Tunable	494 Typ L4	see LEDiL website

LEDiL®

STELLA (Type Z1)

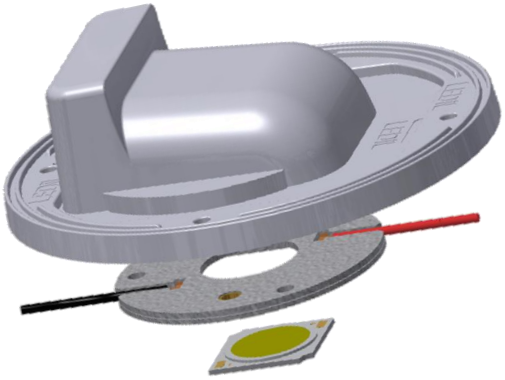

Passende LEDiL Optik Suitable LEDiL optics	**STELLA-T4** **STELLA-VSM** **STELLA-DWC2** **STELLA-G2-T2** **STELLA-G2-T3** **STELLA-G2-T4** LEDiL part numbers
Hersteller Webseite Manufacturer website	www.ledil.com
LED Halter B+W LED Holder B+W	4xx / Typ Z1

4xx Typ Z1

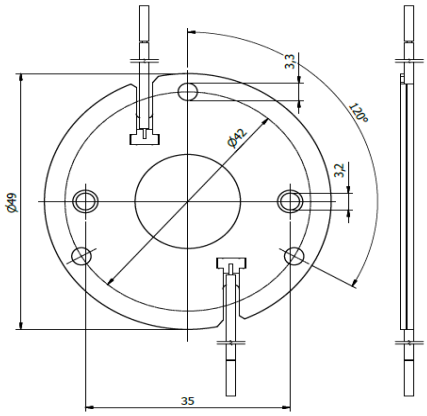

eg. STELLA-DWC2

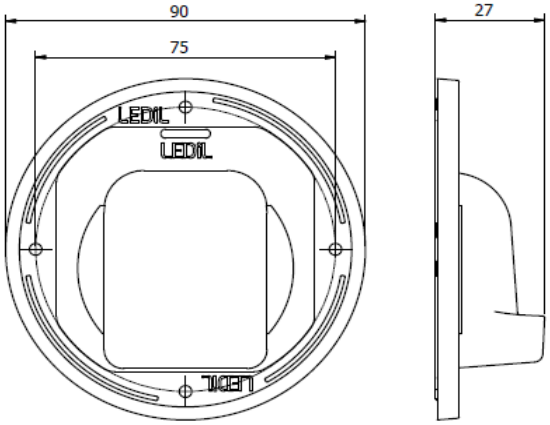

Mögliche Halter / COB Kombinationen / Holder / COB combinations **LEDiL STELLA (Z1)**

COB Hersteller COB Supplier	COB Typ COB Type	Halter Holder	Linse Lense
VS Lighting	DMS 124 ***W	434 Typ Z1	see LEDiL website
VS Lighting	DMS 125 / 126 / 128 ***W	433 Typ Z1	see LEDiL website
VS Lighting	DMS 120 ***W	431 Typ Z1	see LEDiL website
VS Lighting	DMS 12C / 18B ***W	431 Typ Z1	see LEDiL website
VS Lighting	DMS 1208J	433 Typ Z1	see LEDiL website
VS Lighting	DMS 1212J / 1812J	431 Typ Z1	see LEDiL website
VS Lighting	VCA2 122 / 123 / 124	486 Typ Z1	see LEDiL website
VS Lighting	VCA2 126 / 128	477 Typ Z1	see LEDiL website

Mögliche Halter / COB Kombinationen / Holder / COB combinations LEDiL STELLA (Z1)

COB Hersteller COB Supplier	COB Typ COB Type	Halter Holder	Linse Lense
VS Lighting	VCA2 1211 / 1213	471 Typ Z1	see LEDiL website
VS Lighting	TW 1914 Tunable	493 Typ Z1	see LEDiL website
VS Lighting	TW 2820 Tunable	494 Typ Z1	see LEDiL website
VS Lighting	WU-M-618 DimToWarm	434 Typ Z1	see LEDiL website

LEDiL®

WINNIE

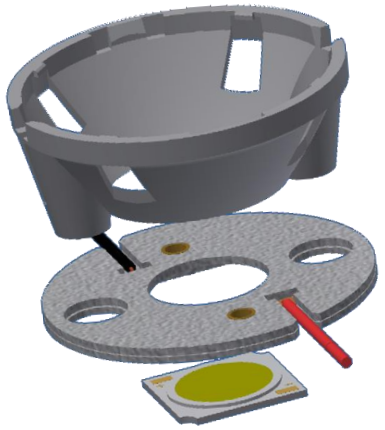

LEDiL Linse
LEDiL lense

LEDiL part numbers

Hersteller Webseite
Manufacturer website

www.ledil.com

LED Halter B+W
LED Holder B+W

4xx / Typ L5

Für WINNIE-HLD_C ist die passende Lösung unter LEDiL HEKLA aufgeführt
Take care that WINNIE-HLD-C requieres a different solution available under LEDiL HEKLA

4xx / Typ L5

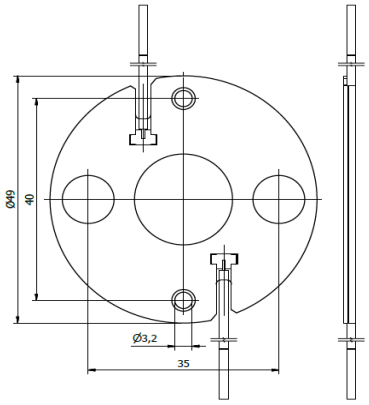

CN14xxx WINNIE-x

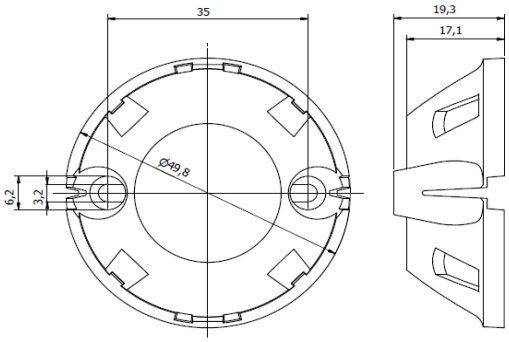

Mögliche Halter / COB Kombinationen / Holder / COB combinations **LEDiL WINNIE**

COB Hersteller COB Supplier	COB Typ COB Type	Halter Holder	Linse Lense
VS Lighting	DMS 102 ***W	434 Typ L5	see part numbers above
VS Lighting	DMS 124 ***W	434 Typ L5	see part numbers above
VS Lighting	DMS 125 / 126 / 128 ***W	433 Typ L5	see part numbers above
VS Lighting	DMS 1208J	433 Typ L5	see part numbers above
VS Lighting	VCA2 122 / 123 / 124	486 Typ L5	see part numbers above
VS Lighting	VCA2 126 / 128	477 Typ L5	see part numbers above
VS Lighting	TW 1914 Tunable	493 Typ L5	see part numbers above
VS Lighting	WU-M-618 DimToWarm	434 Typ L5	see part numbers above

LEDiL®

ZORYA

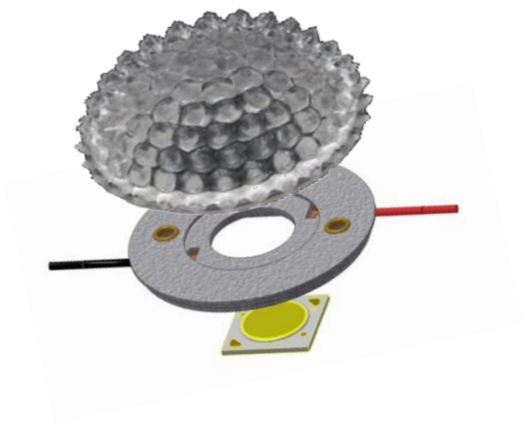

LEDiL Linse
LEDiL lense
F15074_ZORYA-SC

Hersteller Webseite
Manufacturer website
www.ledil.com

LED Halter B+W
LED Holder B+W
4xx / Typ L7

Alternativ zur direkten Montage kann ZORYA auch mit dem Adapter HEKLA montiert werden.
In addition to the direct mounting Zorya can be assembled with the LEDiL HEKLA adaptor

4xx / Typ L7

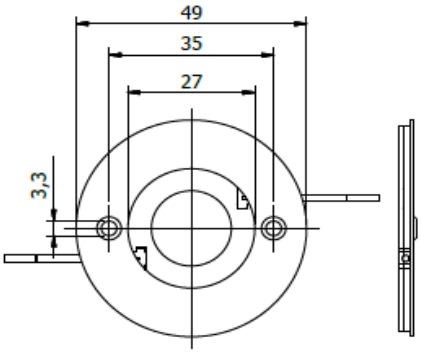

F15074_ZORYA-SC

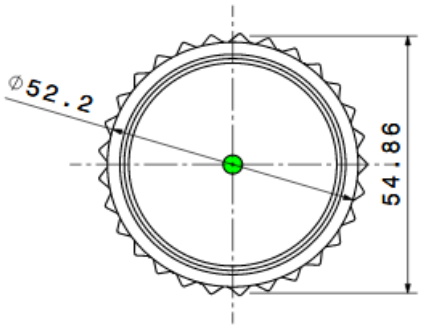

Bottom view

Mögliche Halter / COB Kombinationen / Holder / COB combinations LEDiL ZORYA

COB Hersteller COB Supplier	COB Typ COB Type	Halter Holder	Linse Lense
VS Lighting	DMS 124 ***W	434 Typ L7	F15074_ZORYA-SC
VS Lighting	DMS 125 / 126 / 128 ***W	433 Typ L7	F15074_ZORYA-SC
VS Lighting	DMS 120 ***W	431 Typ L7	F15074_ZORYA-SC
VS Lighting	DMS 12C / 18B ***W	431 Typ L7	F15074_ZORYA-SC
VS Lighting	DMS 1208J	433 Typ L7	F15074_ZORYA-SC
VS Lighting	DMS 1212J / 1812J	431 Typ L7	F15074_ZORYA-SC
VS Lighting	VCA2 122 / 123 / 124	486 Typ L7	F15074_ZORYA-SC
VS Lighting	VCA2 126 / 128	477 Typ L7	F15074_ZORYA-SC
VS Lighting	VCA2 1211 / 1213	471 Typ L7	F15074_ZORYA-SC
VS Lighting	TW 1914 Tunable	493 Typ L7	F15074_ZORYA-SC
VS Lighting	TW 2820 Tunable	494 Typ L7	F15074_ZORYA-SC
VS Lighting	WU-M-618 DimToWarm	434 Typ L7	F15074_ZORYA-SC

LedLink – Linking LEDs to The Real World	**CEW** **CHQ**
Ledlink Optik Ledlink optics	LL01CR-CEWxxL02 LL01CR-CHQxxL02
Hersteller Webseite Manufacturer website	www.ledlink-optics.com
LED Halter B+W LED Holder B+W	4xx / Typ LL1

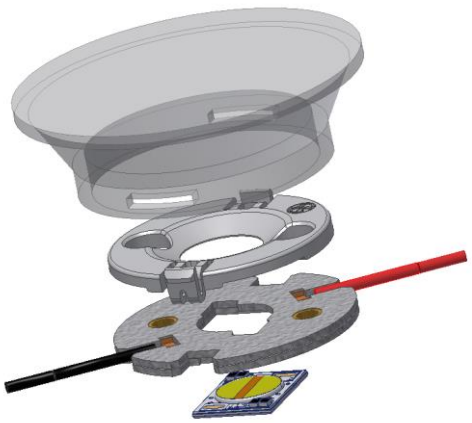

4xx Typ LL1

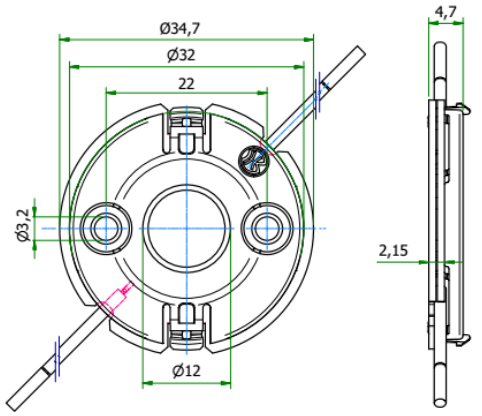

CEW series

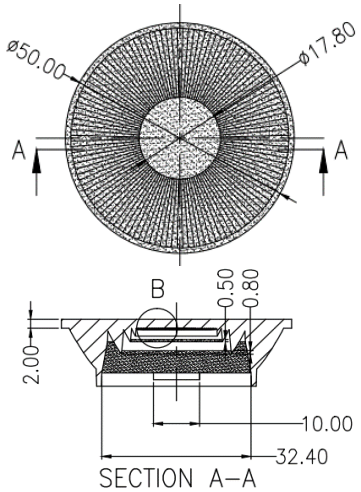

CHQ series

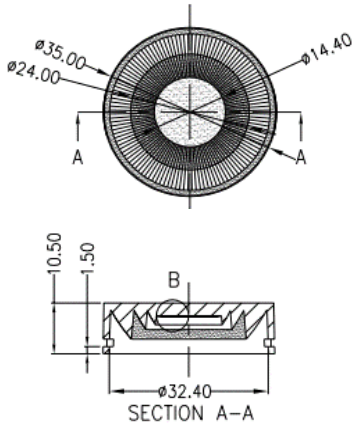

Mögliche Halter / COB Kombinationen / Holder / COB combinations **CEW / CHQ**

COB Hersteller COB Supplier	COB Typ COB Type	Halter Holder	B+W Adapter B+W Adaptor
VS Lighting	DMS 102 ***W	434 Typ LL1	430/48993 Adaptor LL1
VS Lighting	DMS 124 ***W	434 Typ LL1	430/48993 Adaptor LL1
VS Lighting	VCA 042	486 Typ LL1	430/48993 Adaptor LL1
VS Lighting	VCA2 122 / 123 / 124	486 Typ LL1	430/48993 Adaptor LL1
VS Lighting	WU-M-618 DimToWarm	434 Typ LL1	430/48993 Adaptor LL1

Nata Reflector • Lens	**Nata M30**
Nata Reflektor Nata reflector	1687-M 1709-M 1-0788-M
Hersteller Webseite Manufacturer website	www.nata.cn
LED Halter B+W LED Holder B+W	4xx / Typ N1

4xx Typ N1

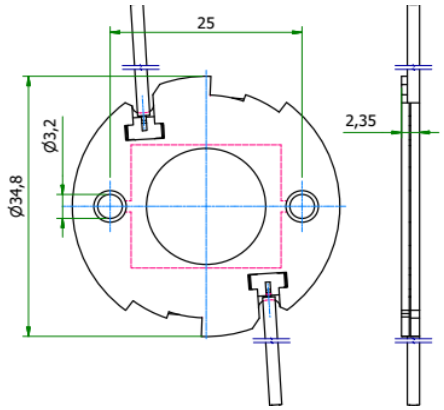

1709-M

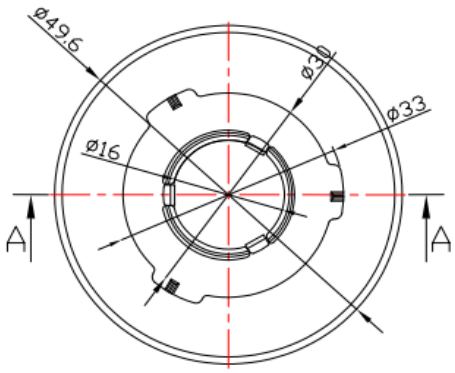

Mögliche Halter / COB Kombinationen / Holder / COB combinations 1709-M

COB Hersteller COB Supplier	COB Typ COB Type	Halter Holder	B+W Adapter B+W Adaptor
VS Lighting	DMS 102 ***W	434 Typ N1	430/48720 Adaptor N1 M30
VS Lighting	DMS 124 ***W	434 Typ N1	430/48720 Adaptor N1 M30
VS Lighting	VCA 042	486 Typ N1	430/48720 Adaptor N1 M30
VS Lighting	VCA2 122 / 123 / 124	486 Typ N1	430/48720 Adaptor N1 M30
VS Lighting	WU-M-618 DimToWarm	434 Typ N1	430/48720 Adaptor N1 M30

MechaTronix

ModuLed Mega
ModuLed Giga
CoolBay Giga-B
CoolBay Tera-B

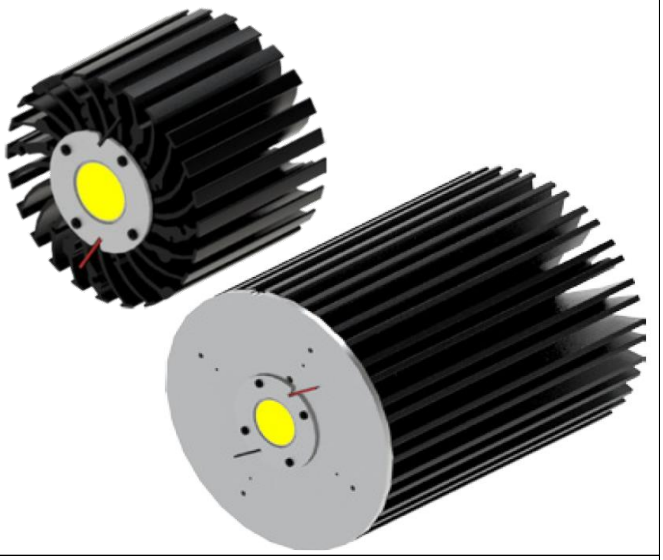

MechaTronix Kühlkörper High Bay Coolers
Mechatronix heat sink

Hersteller Webseite www.led-heatsink.com
Manufacturer website

LED Halter B+W 4xx / Typ M1 (HV)
LED Holder B+W 4xx / Typ M2

4xx / Typ M1 (HV)

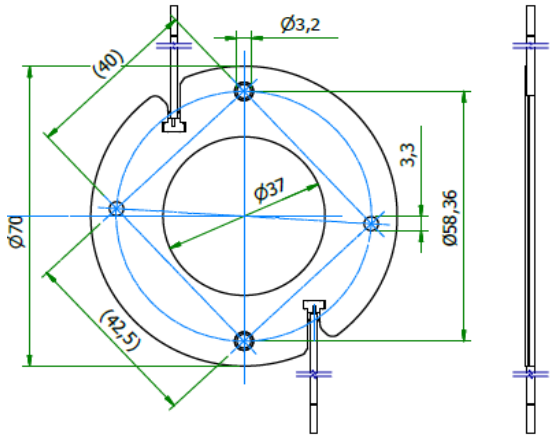

4xx / Typ M2

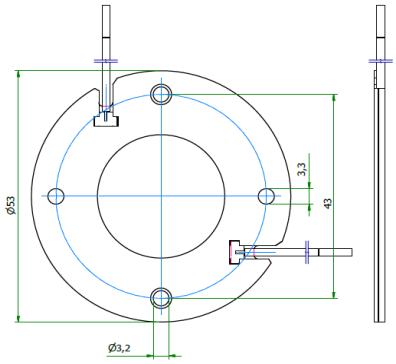

Mögliche Halter / COB Kombinationen / Holder / COB combinations

MechaTronix High Bay Cooler

COB Hersteller COB Supplier	COB Typ COB Type	Halter Holder	Kühlkörper Heat sink
VS Lighting	DMS 120 ***W	431 Typ M2	see MechaTronix website
VS Lighting	DMS 12C / 18B ***W	431 Typ M2	see MechaTronix website
VS Lighting	DMS 1212J / 1812J	431 Typ M2	see MechaTronix website
VS Lighting	VCA2 1211 / 1213	471 Typ M2	see MechaTronix website
VS Lighting	TW 2820 Tunable	494 Typ M2	see MechaTronix website

Zhaga

Buch 3 kompatibler Halter
Book 3 compatible holder

Zhaga Webseite Zhaga website	www.zhagastandard.org	**Zertifikate /** certificates
LED Halter B+W LED Holder B+W	4xx / Typ Z1	**Ausweis-Nr.** 40041342 **File** E47294

Unsere Halter 4xx Typ Z1 entsprechen mit dem Aussendurchmesser und den Befestigungspunkten den Vorgaben von Zhaga Buch 3, aber durch die extrem flache Bauweise können sie nicht zertifziert werden.

The shape and fixing points holders of our holders 4xx Type Z1 are compatible to Zhaga Book 3, but due to the thin design they cannot be certified.

4xx / Typ Z1

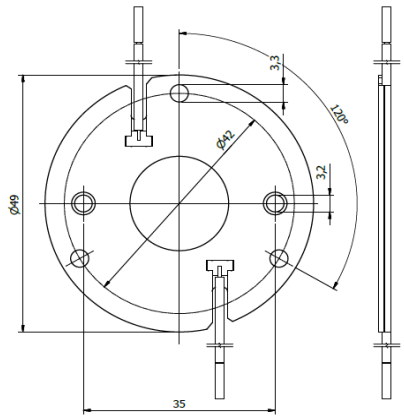

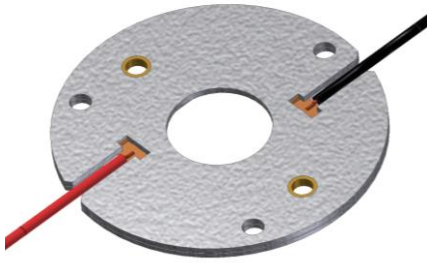

verfügbare Halter / available Holder

COB Hersteller COB Supplier	COB Typ COB Type	Halter Holder
VS Lighting	DMS 102 ***W	434 Typ Z1
VS Lighting	DMS 124 ***W	434 Typ Z1
VS Lighting	DMS 125 / 126 / 128 ***W	433 Typ Z1
VS Lighting	DMS 120 ***W	431 Typ Z1
VS Lighting	DMS 12C / 18B ***W	431 Typ Z1
VS Lighting	DMS 1208J	433 Typ Z1
VS Lighting	DMS 1212J / 1812J	431 Typ Z1
VS Lighting	VCA 042	486 Typ Z1
VS Lighting	VCA2 122 / 123 / 124	486 Typ Z1
VS Lighting	VCA2 126 / 128	477 Typ Z1
VS Lighting	VCA2 1211 / 1213	471 Typ Z1

verfügbare Halter / available Holder

COB Hersteller COB Supplier	COB Typ COB Type	Halter Holder
VS Lighting	TW 1914 Tunable	493 Typ Z1
VS Lighting	TW 2820 Tunable	494 Typ Z1
VS Lighting	WU-M-618 DimToWarm	434 Typ Z1

Wir helfen Ihnen gerne weiter.
Sprechen Sie uns einfach an!

Please don´t hesitate to contact us
for any further questions.

BENDER
+WIRTH

Ihr Kontakt:
Your contact:

Michael Kritzler
Head of Engineering
+49 (0) 2359 / 669 - 184
kritzler@bender-wirth.de

Bender + Wirth GmbH & Co.
D-58566 Kierspe, Germany
+49 (2359) / 669 - 0
sales@bender-wirth.de
www.bender-wirth.de